19980526 156

FINAL REPORT
JULY 1997

REPORT NO. 97-26

ENVIRONMENTAL MONITORING OF TRANSPORTATION OF 30MM AMMUNITION IN MILVANS FROM SAVANNA ARMY DEPOT ACTIVITY (SVDA) TO CRANE ARMY AMMUNITION ACTIVITY (CAAA) VIA HIGHWAY AND RAIL

Prepared for:
U.S. Army Armament Research,
Development and Engineering Center
ATTN: AMSTA-AR-QAN-P(D)
Picatinny Arsenal, NJ 07806-5000

Distribution Unlimited

DTIC QUALITY INSPECTED 3

VALIDATION ENGINEERING DIVISION
SAVANNA, ILLINOIS 61074-9639

U.S. ARMY DEFENSE AMMUNITION CENTER
SAVANNA, ILLINOIS

AVAILABILITY NOTICE

A copy of this report will be furnished each attendee on automatic distribution. Additional copies or authority for reprinting may be obtained by written request from Director, U.S. Army Defense Ammunition Center, ATTN: SIOAC-DEV, Savanna, IL 61074-9639.

DISTRIBUTION INSTRUCTIONS

Destroy this report when no longer needed. Do not return.

***

Citation of trade names in this report does not constitute an official endorsement.

***

The information contained herein will not be used for advertising purposes.

REPORT DOCUMENTATION PAGE

Form Approved OMB No. 0704-0188

1a. REPORT SECURITY CLASSIFICATION: UNCLASSIFIED

1b. RESTRICTIVE MARKINGS:

2a. SECURITY CLASSIFICATION AUTHORITY:

2b. DECLASSIFICATION / DOWNGRADING SCHEDULE:

3. DISTRIBUTION / AVAILABILITY OF REPORT: UNLIMITED

4. PERFORMING ORGANIZATION REPORT NUMBER(S): 97-26

5. MONITORING ORGANIZATION REPORT NUMBER(S):

6a. NAME OF PERFORMING ORGANIZATION: U.S. Army Defense Ammunition Center

6b. OFFICE SYMBOL (if applicable): SIOAC-DEV

7a. NAME OF MONITORING ORGANIZATION:

6c. ADDRESS (City, State, and ZIP Code): ATTN: SIOAC-DEV
Savanna, IL 61074-9639

7b. ADDRESS (City, State, and ZIP Code):

8a. NAME OF FUNDING / SPONSORING ORGANIZATION: U.S. Army Armament Research, Development and Engineering Center

8b. OFFICE SYMBOL (if applicable): AMSTA-AR-QAN-P(D)

9. PROCUREMENT INSTRUMENT IDENTIFICATION NUMBER:

8c. ADDRESS (City, State, and ZIP Code): ATTN: AMSTA-AR-QAN-P(D)
Picatinny Arsenal, NJ 07806-5000

10. SOURCE OF FUNDING NUMBERS

PROGRAM ELEMENT NO.	PROJECT NO.	TASK NO.	WORK UNIT ACCESSION NO.

11. TITLE (Include Security Classification): Environmental Monitoring of Transportation of 30 MMAmmunition in MILVANs from Savanna Army Depot Activity (SVDA) to Crane Army Ammunition Activity (CAAA) Via Highway and Rail

12. PERSONAL AUTHOR(S): Quinn D. Hartman

13a. TYPE OF REPORT: Final

13b. TIME COVERED: FROM _____ TO _____

14. DATE OF REPORT (Year, Month, Day): 1997 July

15. PAGE COUNT:

16. SUPPLEMENTARY NOTATION:

17. COSATI CODES			18. SUBJECT TERMS (Continue on reverse if necessary and identify by block number)
FIELD	GROUP	SUB-GROUP	

19. ABSTRACT (Continue on reverse if necessary and identify by block number)

Two MILVANs loaded with 30MM ammunition were monitored during transport from Savanna Army Depot Activity (SVDA) to Crane Army Ammunition Activity (CAAA). The first instrumented MILVAN was transported on a flatbed semitrailer and the second MILVAN was transported by rail. Event Data Recorders (EDRs) from Instrumented Sensor Technology, Inc. were set up to monitor shock/vibration in all three axes as well as temperature and humidity. Monitoring was conducted on 03 June and 05 - 30 June 1997. The EDR monitoring the MILVAN transported over-the-road experienced 1,231 shock/vibration events and 222 temperature/humidity readings. The EDR monitoring the MILVAN transported by rail experienced 9,081 shock/vibration events and 4,122 temperature/humidity readings.

20. DISTRIBUTION / AVAILABILITY OF ABSTRACT: XX UNCLASSIFIED/UNLIMITED ☐ SAME AS RPT. ☐ DTIC USERS

21. ABSTRACT SECURITY CLASSIFICATION: UNCLASSIFIED

22a. NAME OF RESPONSIBLE INDIVIDUAL: JEROME H. KROHN

22b. TELEPHONE (Include Area Code): 815-273-8929

22c. OFFICE SYMBOL: SIOAC-DEV

DD Form 1473, Jun 86 — Previous editions are obsolete

U.S. ARMY DEFENSE AMMUNITION CENTER
VALIDATION ENGINEERING DIVISION
SAVANNA, IL 61074-9639

REPORT NO. 97-26

ENVIRONMENTAL MONITORING OF TRANSPORTATION OF 30MM AMMUNITION FROM SAVANNA ARMY DEPOT ACTIVITY (SVDA) TO CRANE ARMY AMMUNITION ACTIVITY (CAAA) VIA HIGHWAY AND RAIL

TABLE OF CONTENTS

PART PAGE NO.

1. INTRODUCTION 1-1

A. BACKGROUND 1-1

B. AUTHORITY 1-1

C. OBJECTIVE 1-1

D. CONCLUSION 1-1

2. ATTENDEES 2-1

3. TEST PROCEDURES 3-1

4. TEST RESULTS 4-1

5. GRAPHS 5-1

6. MINIMUM AND MAXIMUM VALUES BY EVENT 6-1

7. DRAWING 7-1

PART 1

INTRODUCTION

A. BACKGROUND. The U.S. Army Defense Ammunition Center (DAC), Validation Engineering Division (SIOAC-DEV), monitored the transportation of two MILVANs loaded with 30MM ammunition from Savanna Army Depot Activity (SVDA), to Crane Army Ammunition Activity (CAAA). Event Data Recorders (EDRs) from Instrumented Sensor Technology, Inc. were set up to monitor shock/vibration in all three axes as well as temperature and humidity. Monitoring was conducted on 03 and 05 - 30 June 1997.

B. AUTHORITY. This monitoring was conducted IAW mission responsibilities delegated by the U.S. Army Armament, Munitions and Chemical Command (AMCCOM), Rock Island, IL. Reference is made to the following:

1. Change 4, 4 October 1974, to AR740-1, 23 April 1973, Storage and Supply Activity Operation.

2. AMCCOM-R, 10-17, Mission and Major Functions of USADACS, 13 January 1986.

C. OBJECTIVE. The objective of this monitoring was to gain additional insight into the environmental factors that can effect ammunition during shipment.

D. CONCLUSION. Results from monitoring indicated that the environmental factors for this shipment of ammunition were relatively mild. Temperatures during highway transportation ranged from 62 - 66 degrees Fahrenheit and during rail transportation temperatures ranged from 53 - 96 degrees Fahrenheit. Humidity during truck transportation ranged from 69 - 75 percent and during rail transportation humidity ranged from 23 - 99 percent. The majority of the shock/vibration for the truck transport was less than 0.5 Gs and the highest level detected was

1.08 Gs. During rail transport, the majority of the shock/vibration was less than 1.25 Gs and the highest level detected was 3.32 Gs.

PART 2

JUNE 1997

ATTENDEES

Quinn D. Hartman
General Engineer
DSN 585-8992
815-273-8992

Director
U.S. Army Defense Ammunition Center
ATTN: SIOAC-DEV
3700 Army Depot Road
Savanna, IL 61074-9639

PART 3

TEST PROCEDURES

The Event Data Recorders (EDRs) were glued to the MILVAN floor at the rear center of the container just inside the doors. The loggers were positioned such that the positive Y-axis direction was in the direction of travel (longitudinal), the positive X-axis direction was from the driver's side toward the passenger's side (lateral), and the positive Z-axis was in an upward direction (vertical). The EDRs used during the transportation monitoring were programmed to record a temperature and humidity reading every 10 minutes and all shock and vibration events that exceeded 0.25-Gs on any axis for a 10-millisecond duration. For this monitoring, 400 data samples were recorded for each acceleration event that exceeded the 0.25 Gs trigger criteria, 200 points prior to the trigger, and 200 points after the trigger. Each acceleration event recorded was also stamped with the date and time the acceleration event occurred. Sample rate for the acceleration events was 200 points per second for each axis and all acceleration events were filtered with a 50Hz low bandpass analog filter. Temperature/humidity readings were collected at 10-minute intervals independent of the shock/vibration monitoring. Based on these memory requirements, the EDRs were limited to retaining only 500 shock/vibration events. The EDR loggers were programmed to save the 500 peak events and discard the remainder of the events based on the resultant vector value from each shock/vibration event.

PART 4

TEST RESULTS

Following arrival at CAAA, the EDRs were removed from the pallet and returned to DAC for downloading of the collected test data. Results from the collected data indicated that the EDR installed in the MILVAN transported by highway experienced 1,231 shock/vibration events which met the triggering criteria (the peak 500 events being saved) and had collected 79 temperature/humidity readings. After initial analysis, the last 88 events of the 500 peak events saved were found to have occurred after the EDR had been removed from the MILVAN and were, therefore, discarded. Results from the EDR logger installed in the MILVAN that was transported by rail indicated that the MILVAN experienced 9,081 shock/vibration events which met the triggering criteria (the peak 500 events being saved) and had collected a total of 3,739 temperature/humidity readings.

Highway Transport. As seen in the shock/vibration report by event, the peak 412 events (500 minus 88) spanned the time from 06:50:04 to 18:57:12 on 03 June 1997. Using both the absolute value of the minimum value and the maximum value, frequency distribution charts were developed for each of the X (lateral), Y (longitudinal), and Z (vertical) axis. As seen in the frequency distribution chart, the majority of the events were at or below a level of 0.5 Gs indicating the MILVAN experienced a smooth ride the majority of the time. Peak G values for the 412 peak events were -0.58 to 0.58 for the lateral axis, -0.46 to 0.46 for the longitudinal axis, and -0.94 to 1.08 for the vertical axis. In addition to the frequency distribution, graphs of the peak events for each axis were produced (see part 5). As can be seen in the shock/vibration report by event, the peak event for the lateral axis occurred on 03 June 97 at 13:51:43, the peak event for the longitudinal axis occurred on 03 June 97 at 08:59:54, and the peak event for the vertical axis occurred on 03 June 97 at 06:56:27. The analysis of the temperature/humidity was

the last step in the data analysis. As can be seen in part 5, temperatures during transport ranged from 62 - 66 degrees Fahrenheit and the humidity ranged from 69 - 75 percent.

Rail Transport. The peak 500 events collected by the EDR spanned the time from 01:45:43 on 15 June 1997 to 09:14:52 on 30 June 1997. As before, the absolute value of the minimum value and the maximum value were used to develop a frequency distribution for each of the X (lateral), Y (longitudinal), and Z (vertical) axis. As seen in part 5, the majority of the events during the rail transport were at or below a level of 1.25 Gs. The G levels were approximately twice as high as the highway transport, but were significantly lower than the G levels that are experienced during the rail certification testing that the Loading and Bracing Procedures are required to go through prior to use (see Drawings). Peak G values for the 500 events were 1.16 to 1.14 for the lateral axis, -2.08 to 3.32 for the longitudinal axis, and -3.00 to 2.78 for the vertical axis. In the next step, graphs of the peak events for each axis were produced (see part 5). As can be seen in the shock/vibration report by event, the peak event for the lateral axis occurred on 28 June 1997 at 13:46:15, the peak event for the longitudinal axis occurred on 17 June 97 at 20:17:03, and the peak event for the vertical axis occurred on 15 June 97 at 07:44:01. The analysis of the temperature/humidity was, again, the last step in the data analysis. As can been seen in part 5, the temperatures during transport ranged from 53 - 96 degrees Fahrenheit and the humidity ranged from 23 - 99 percent.

PART 5

GRAPHS

Frequency Distribution of Peak Acceleration Values during Truck Transport (03 June 1997)

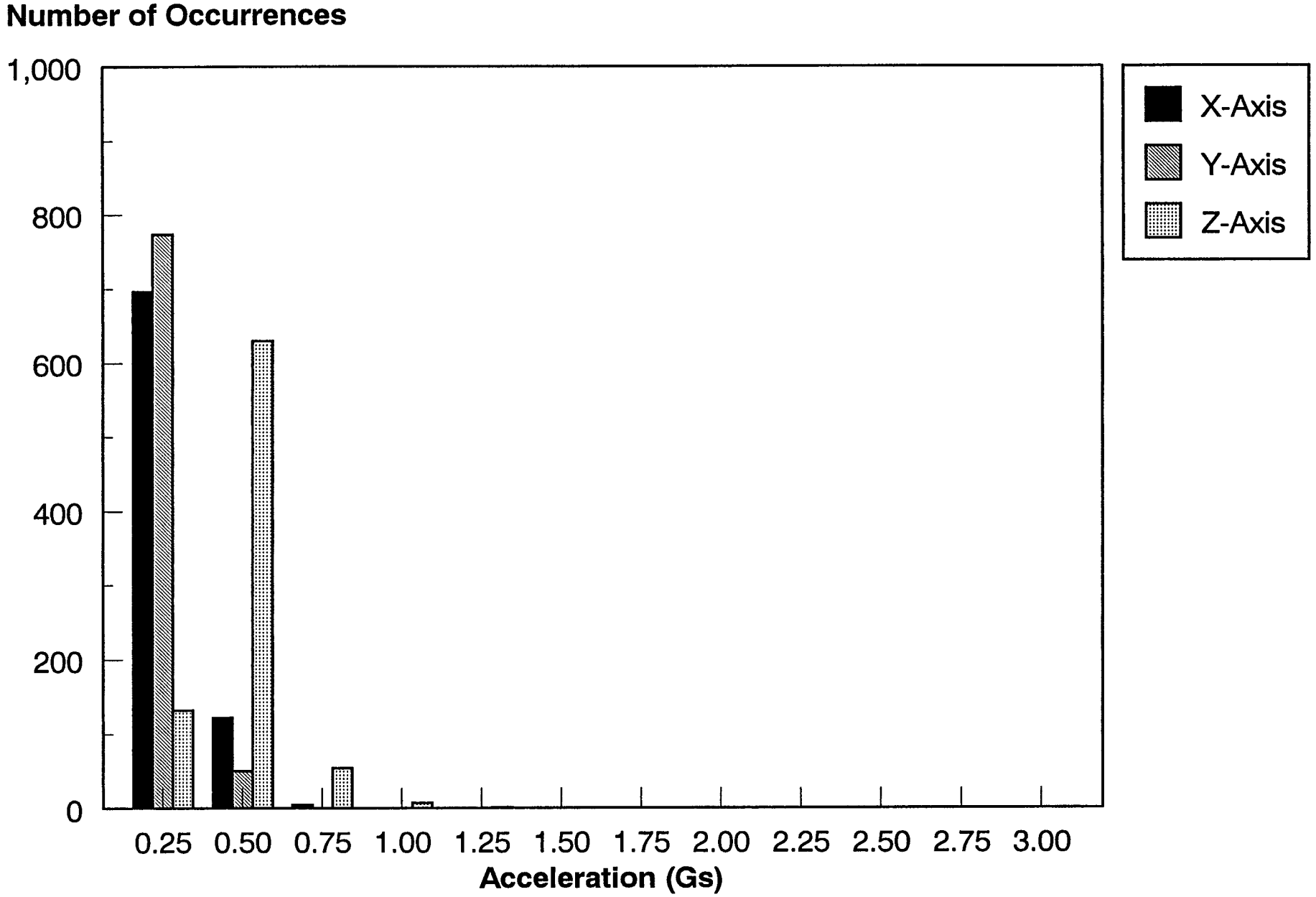

Peak X-Axis Event during Truck Transport
(03 June 1997)

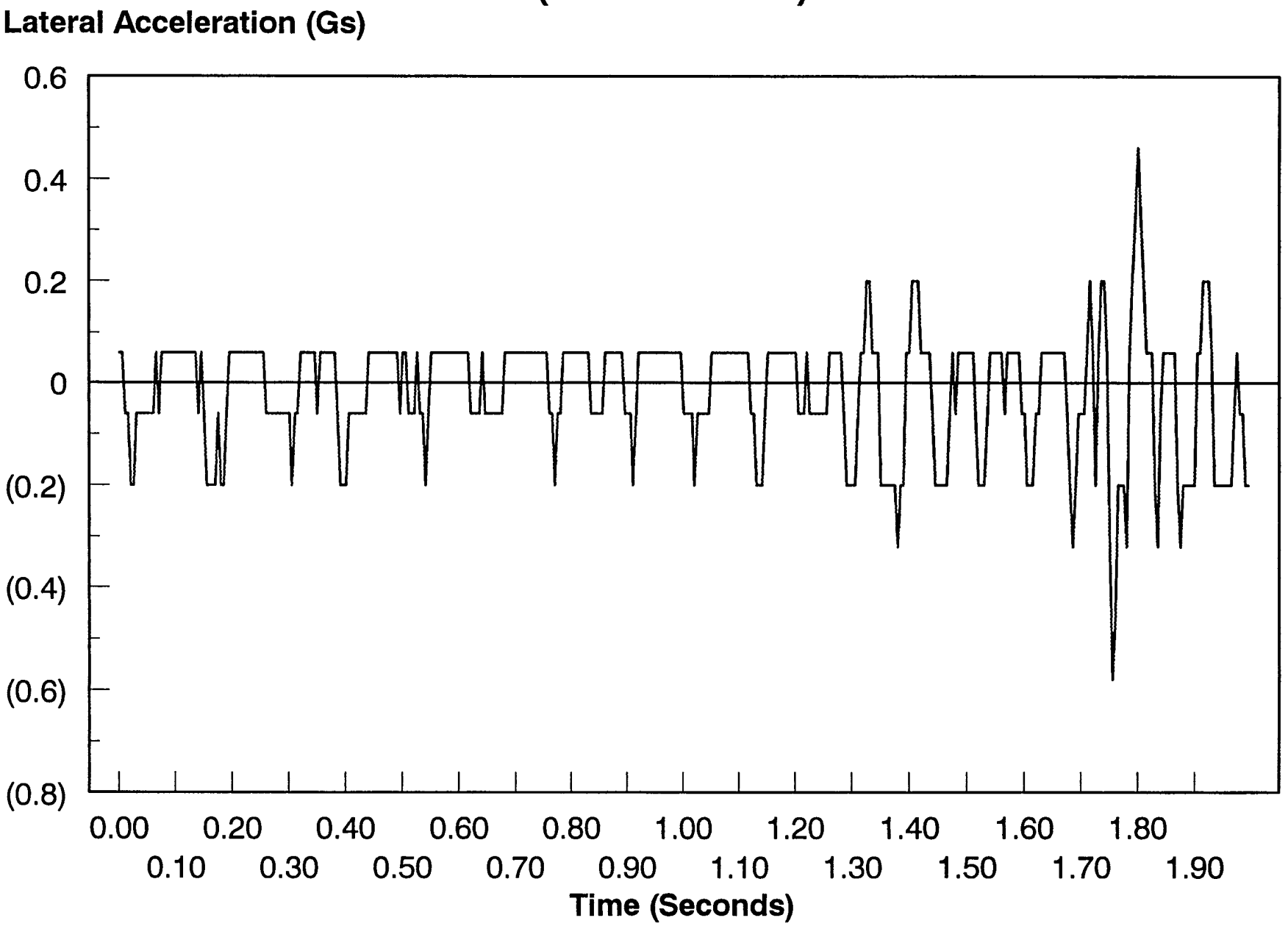

Peak X-Axis Event during Truck Transport
(03 June 1997)

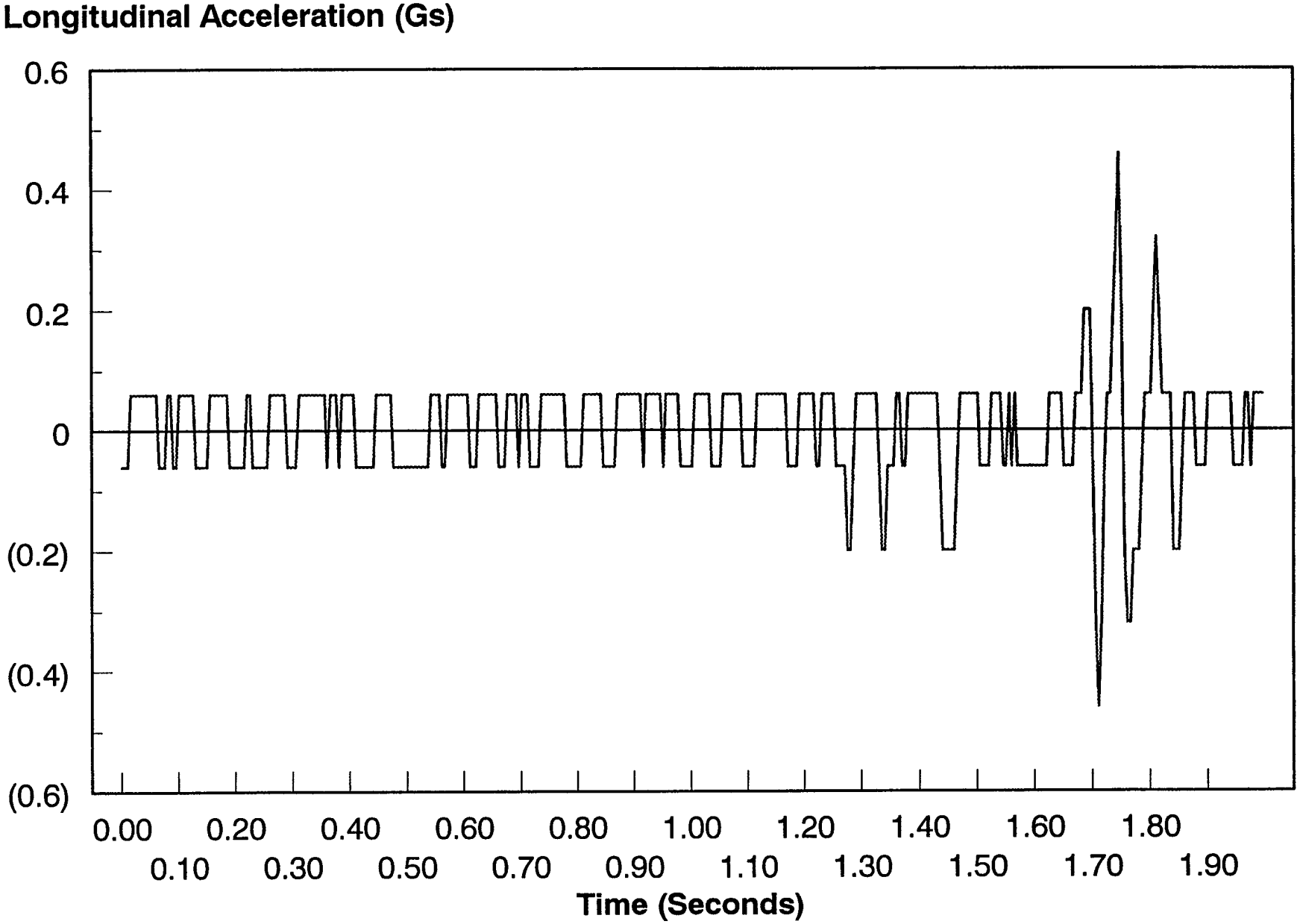

Peak X-Axis Event during Truck Transport
(03 June 1997)

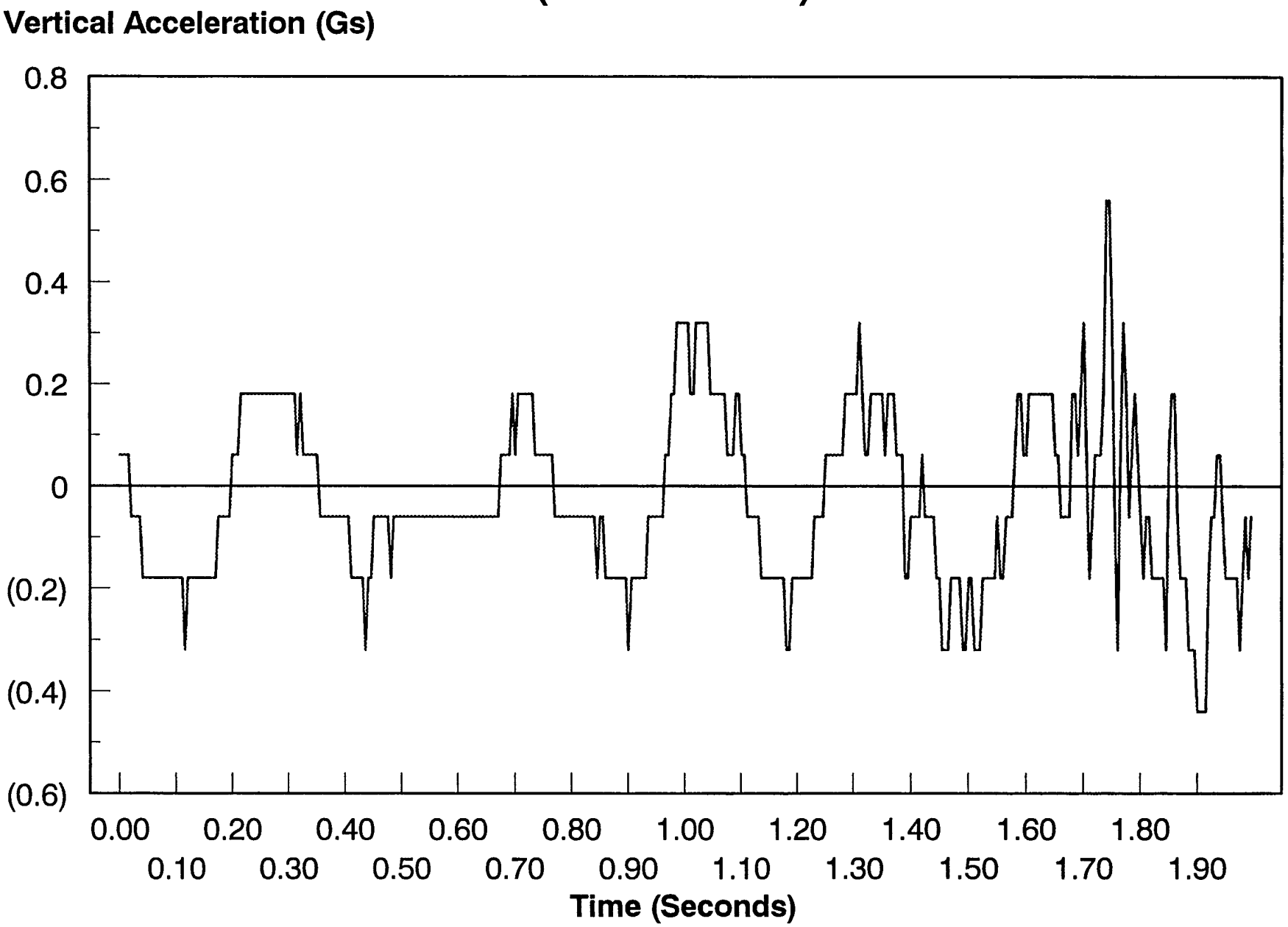

Peak Y-Axis Event during Truck Transport
(03 June 1997)

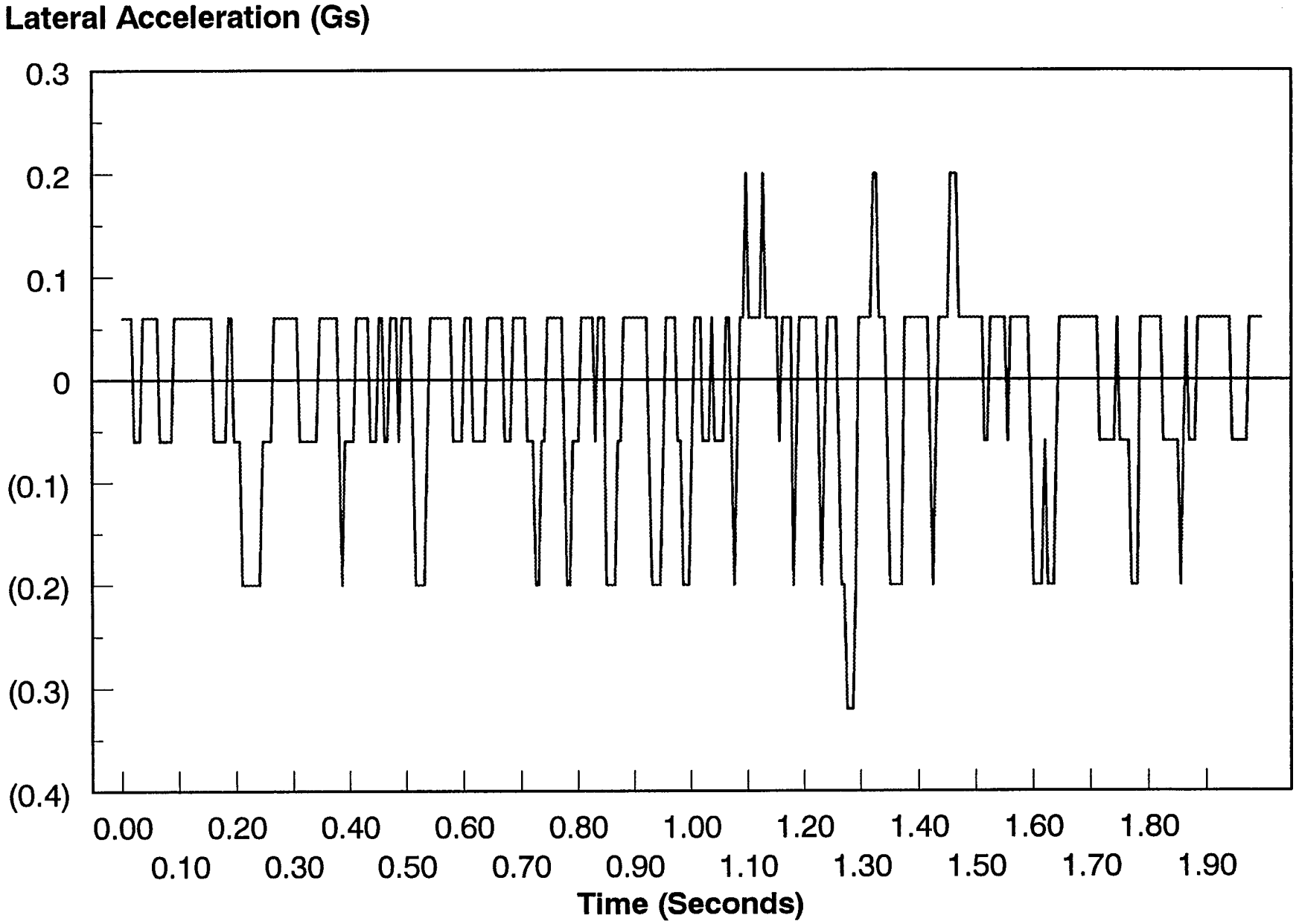

Peak Y-Axis Event during Truck Transport
(03 June 1997)

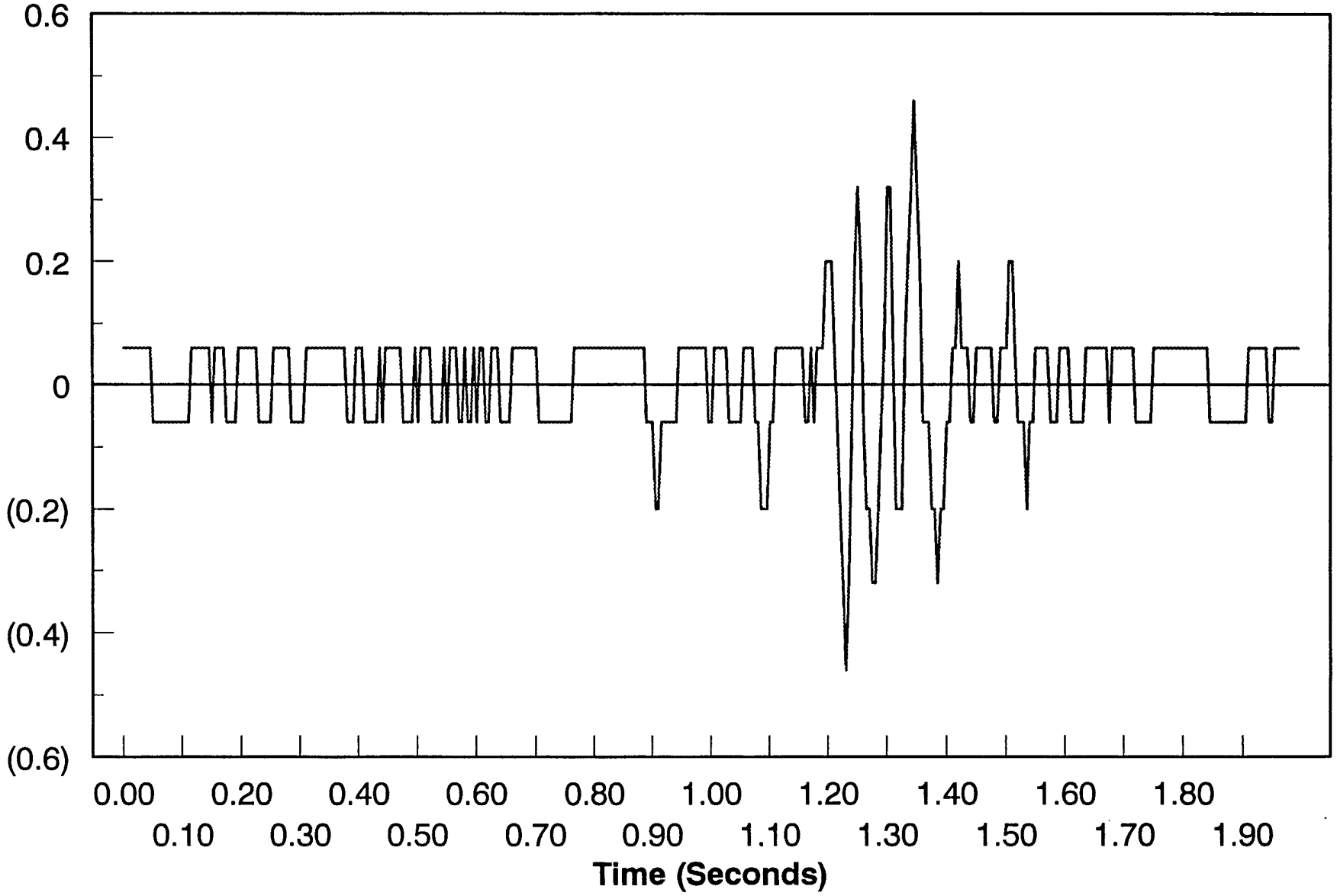

Peak Y-Axis Event during Truck Transport (03 June 1997)

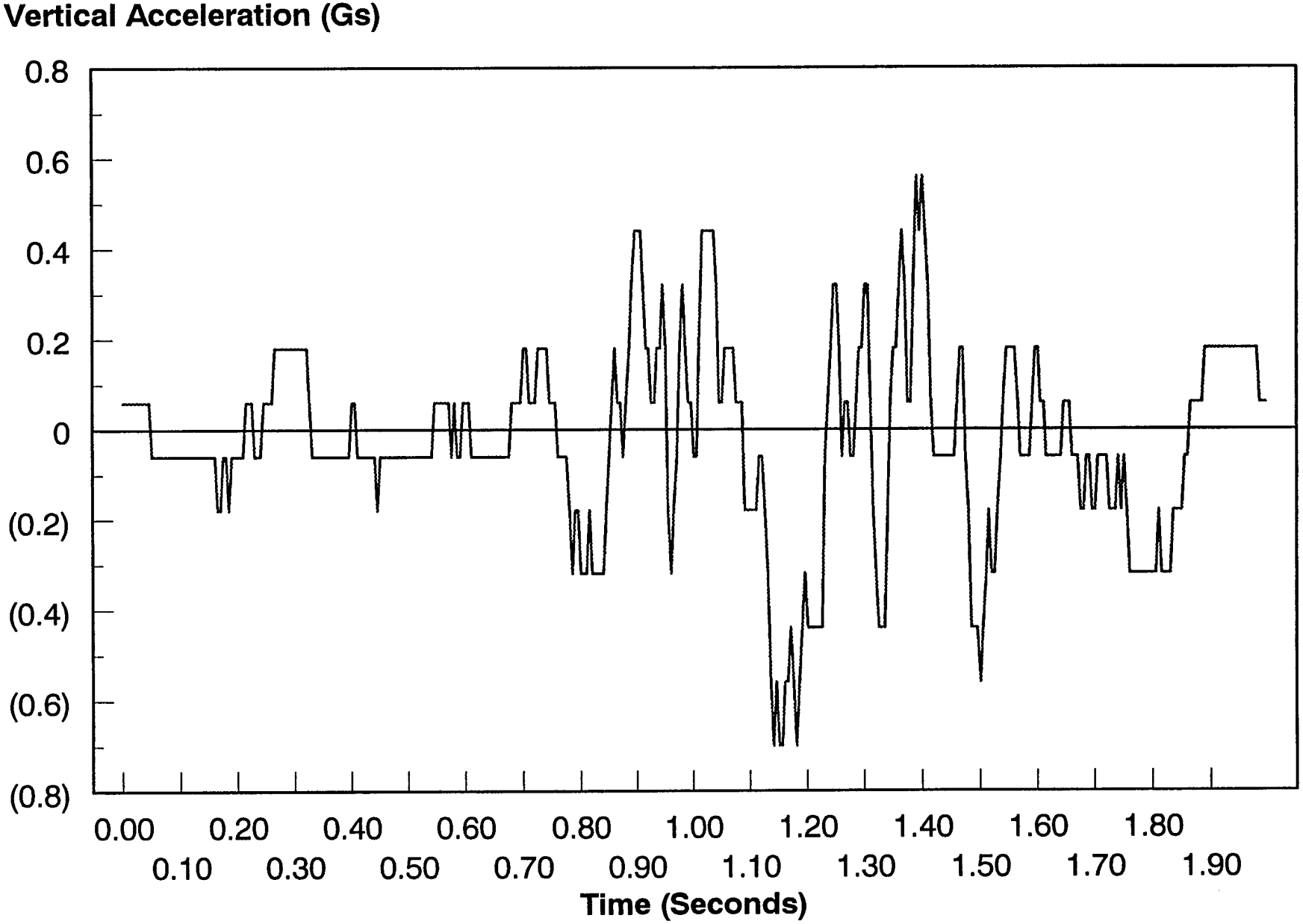

Peak Z-Axis Event during Truck Transport
(03 June 1997)

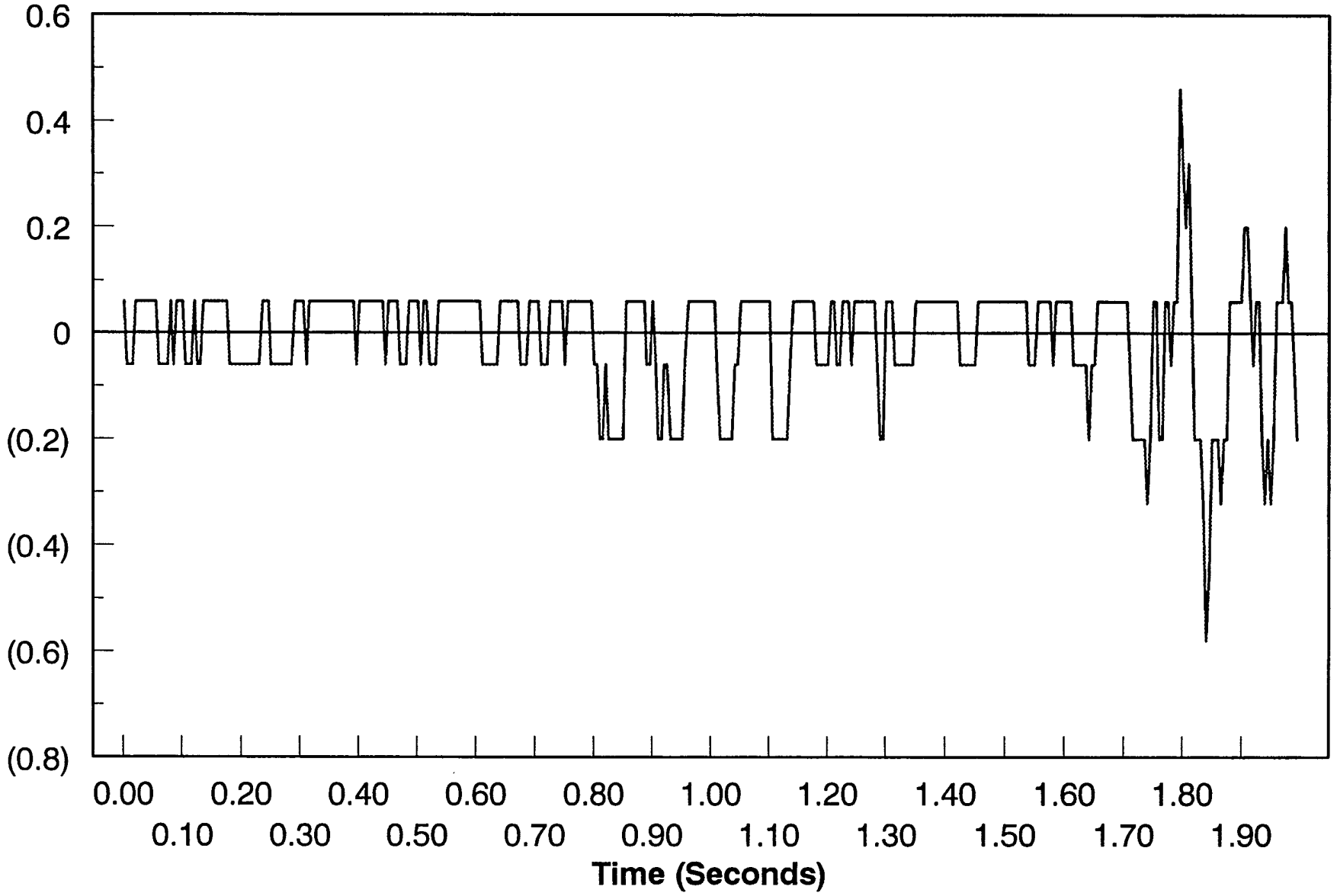

Peak Z-Axis Event during Truck Transport
(03 June 1997)

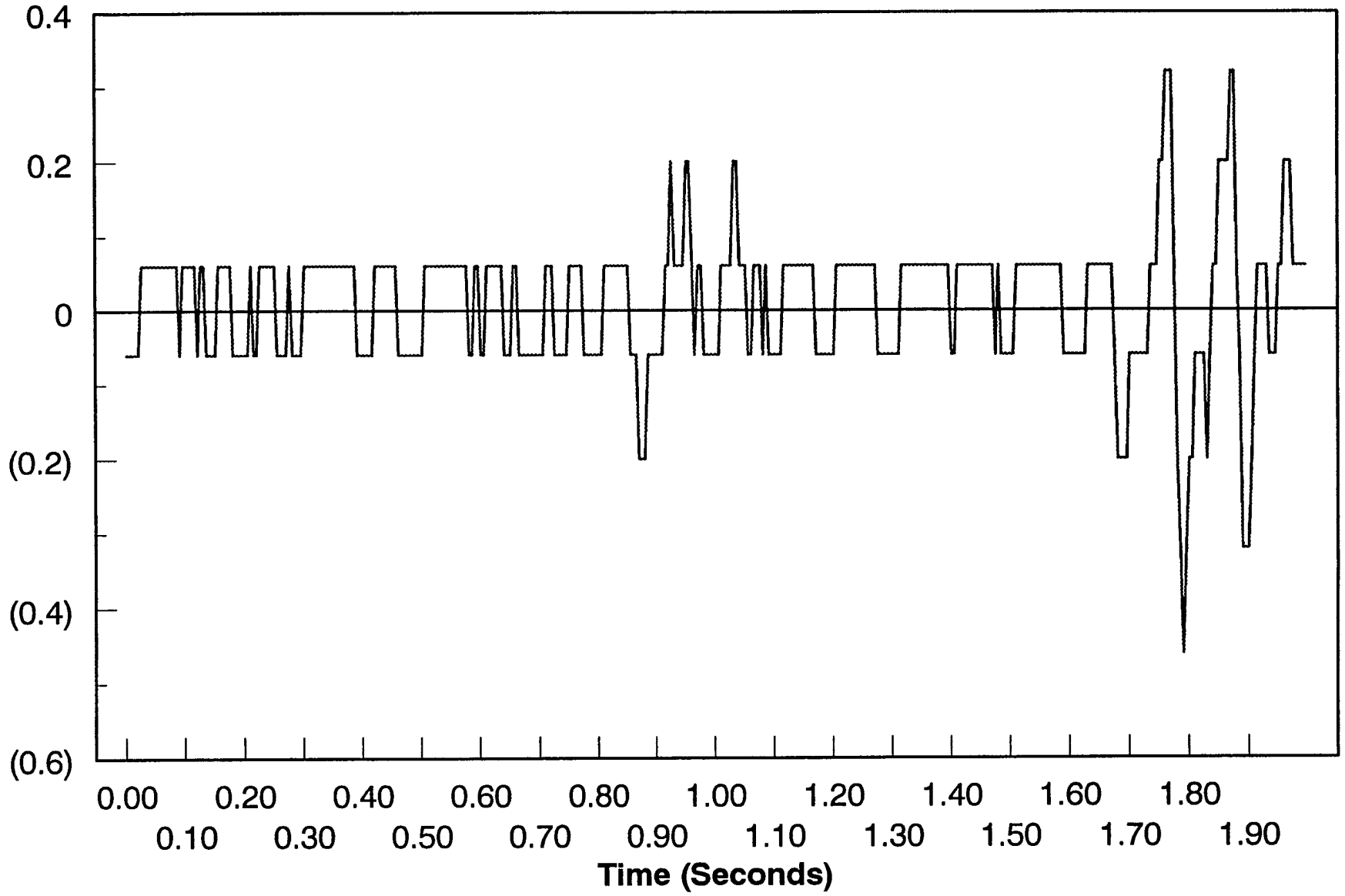

Peak Z-Axis Event during Truck Transport
(03 June 1997)

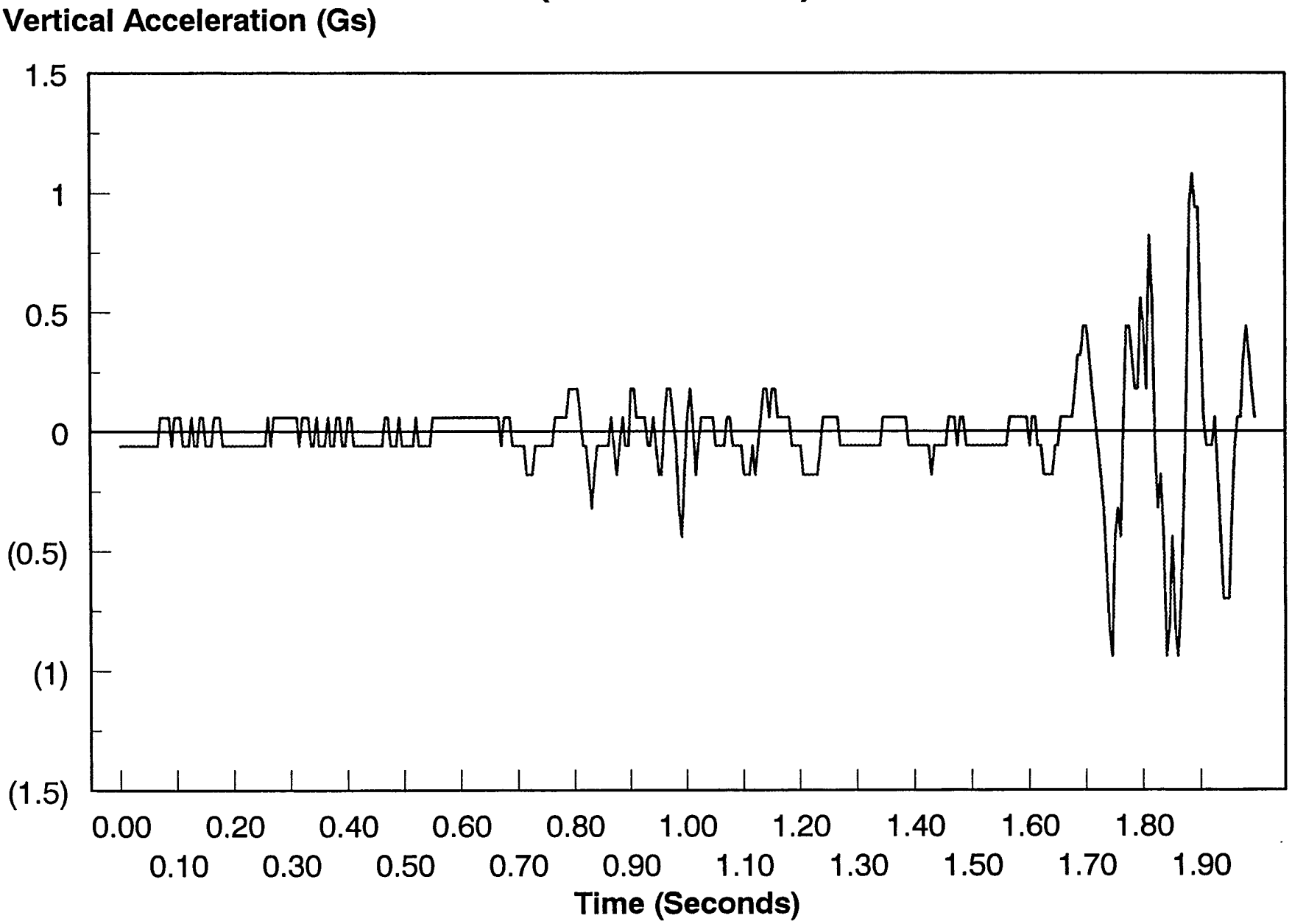

Temperature during Truck Transport
(03 June 1997)

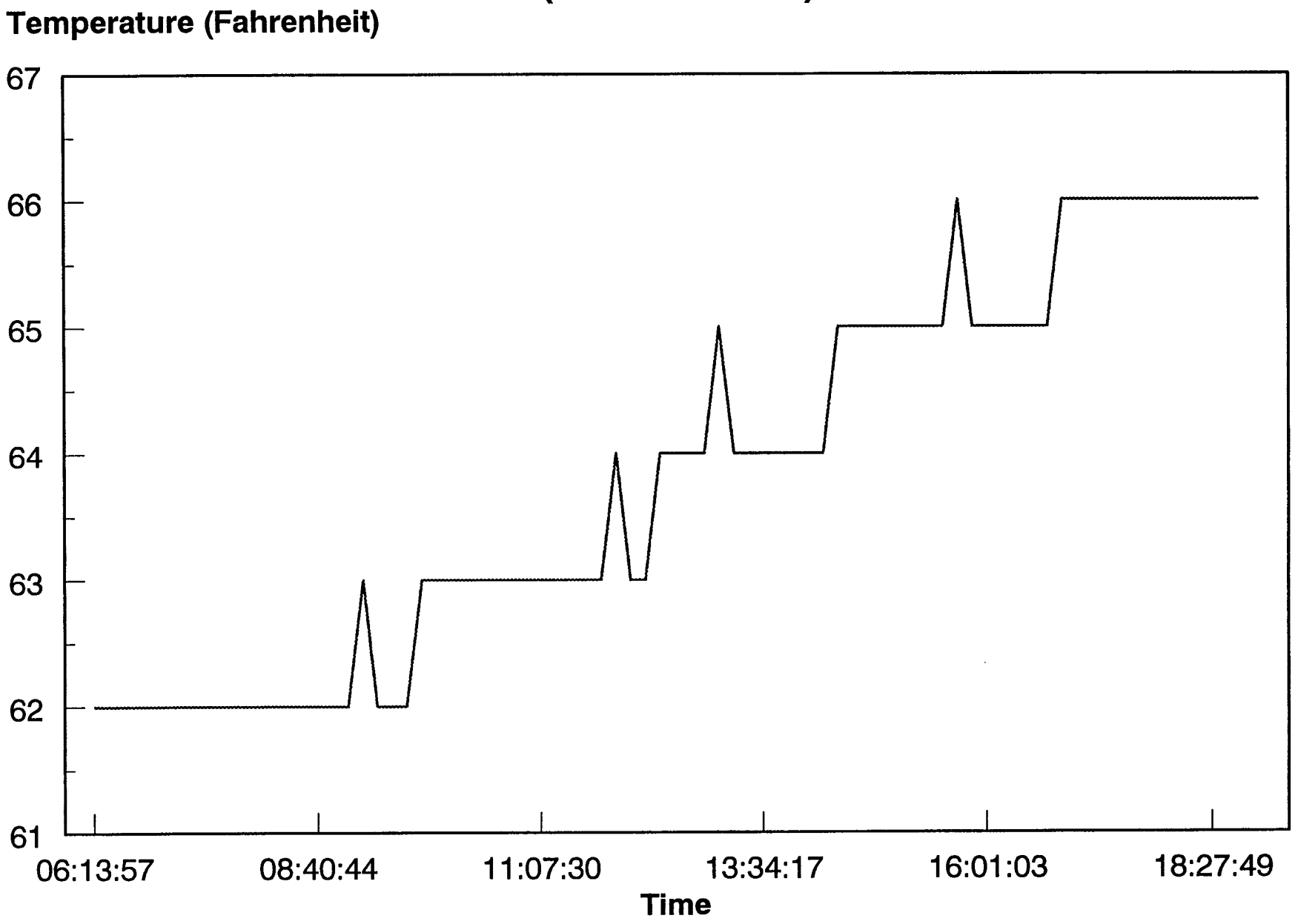

Humidity during Truck Transport
(03 June 1997)

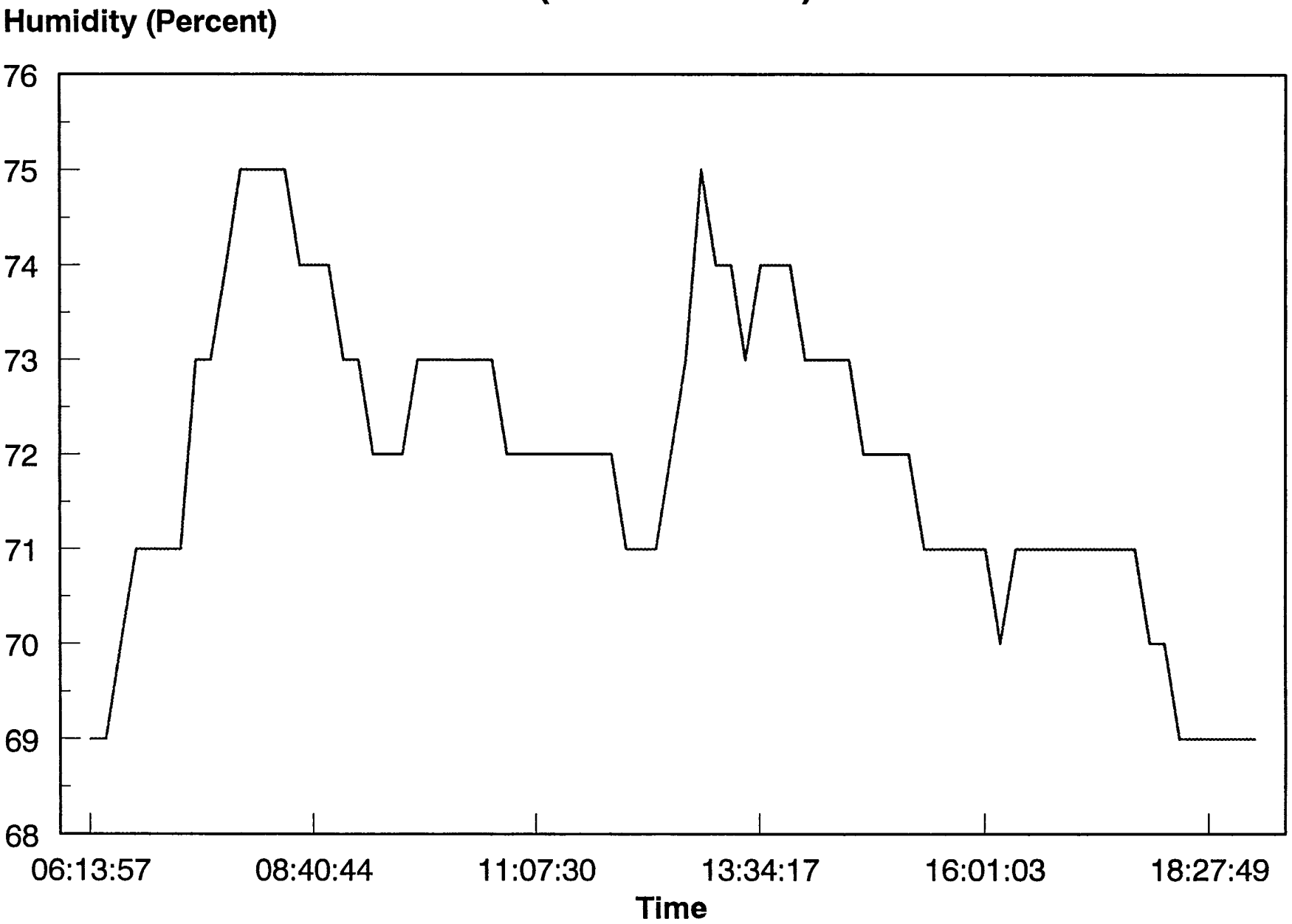

Frequency Distribution of Peak Acceleration Values during Rail Transport (15 June - 30 June 1997)

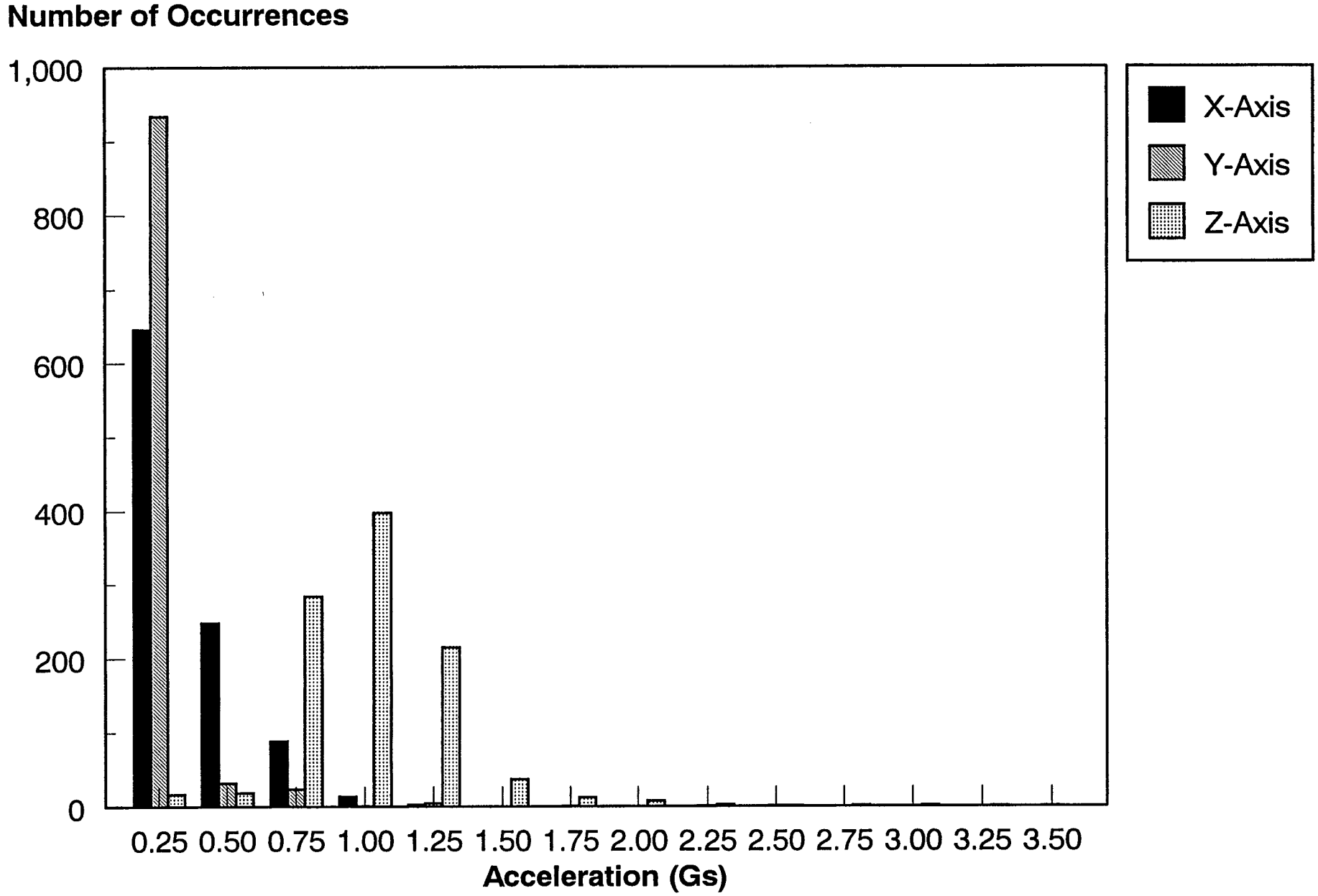

Peak X-Axis Event during Rail Transport
(28 June 1997)

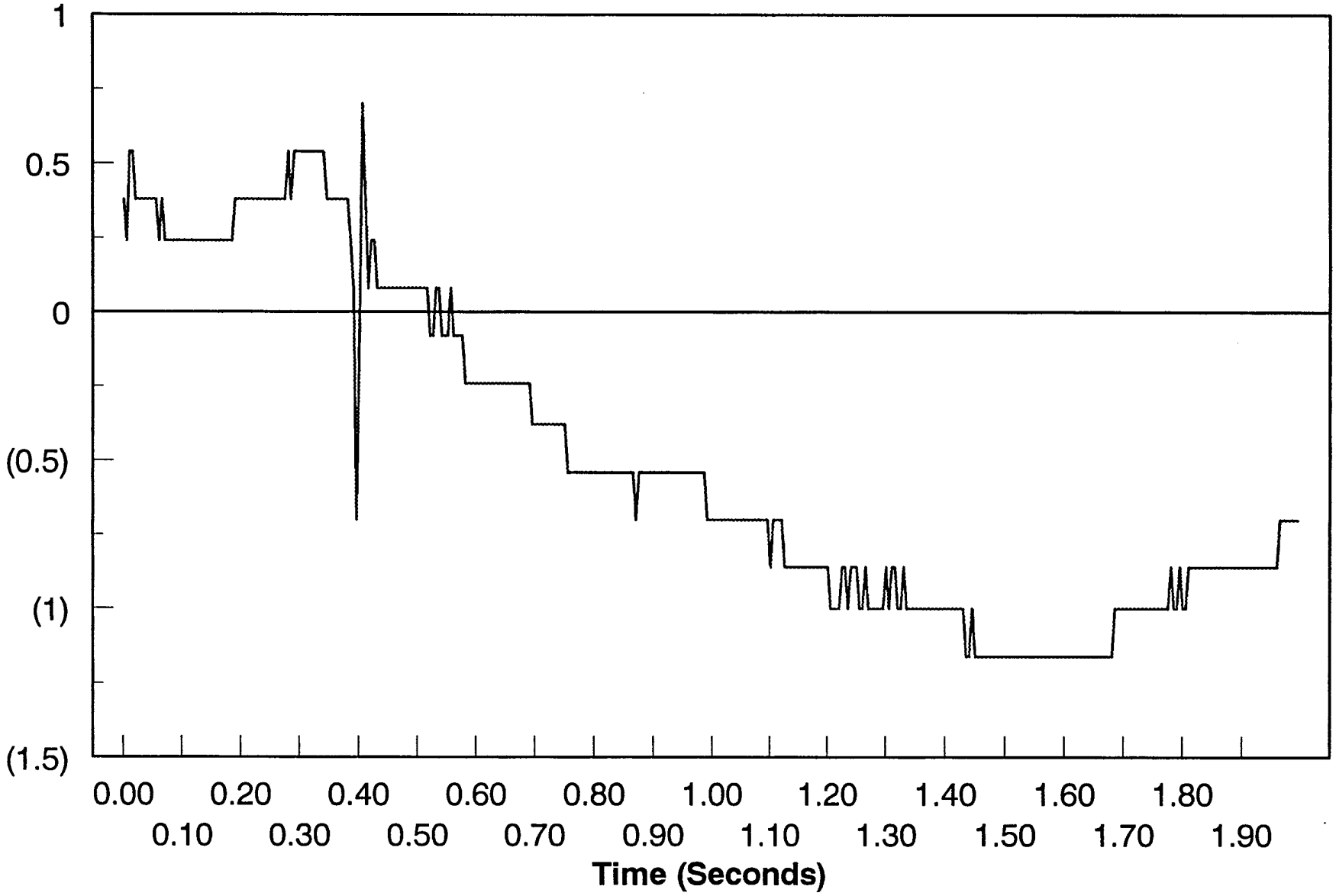

Peak X-Axis Event during Rail Transport
(28 June 1997)

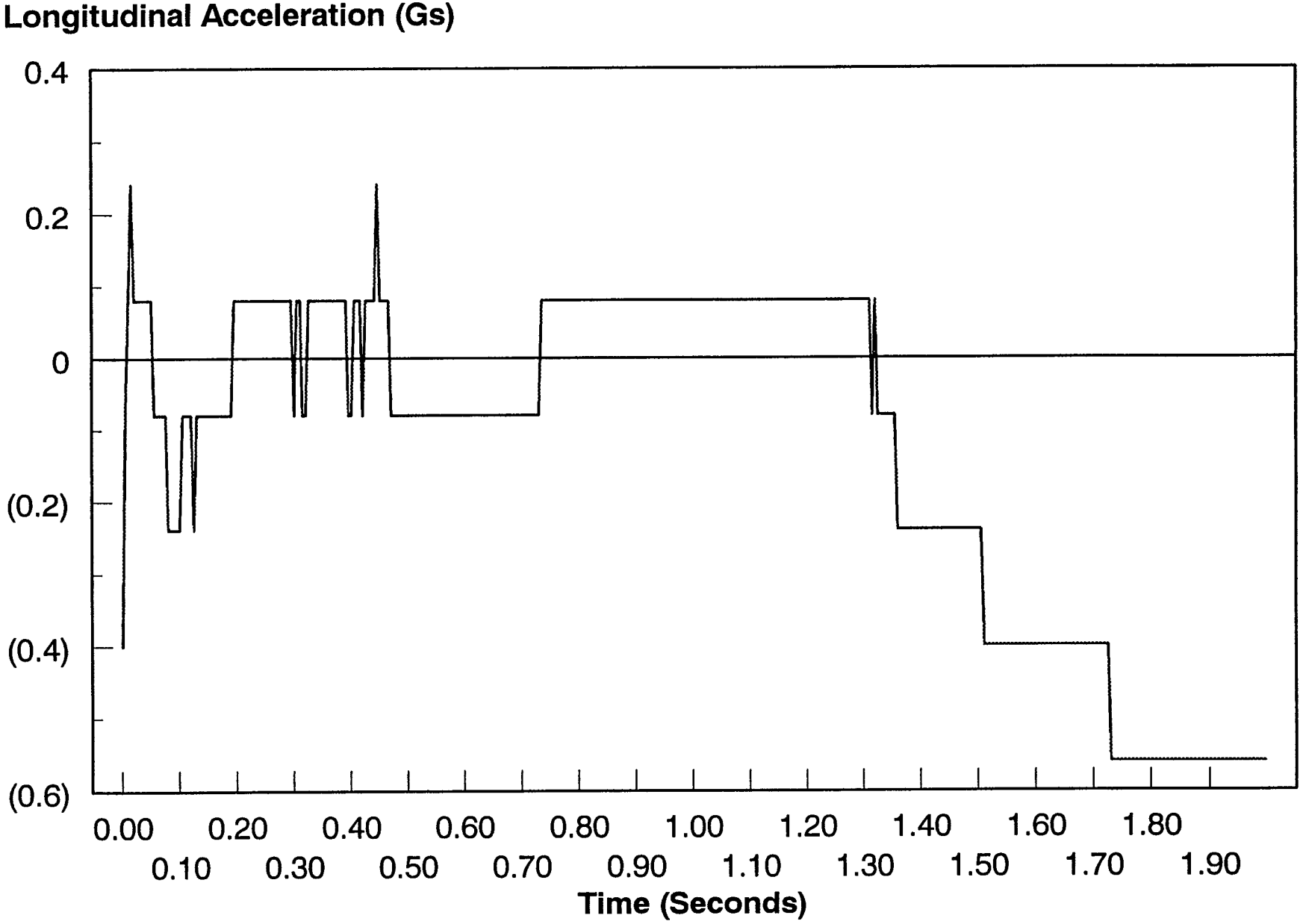

Peak X-Axis Event during Rail Transport
(28 June 1997)

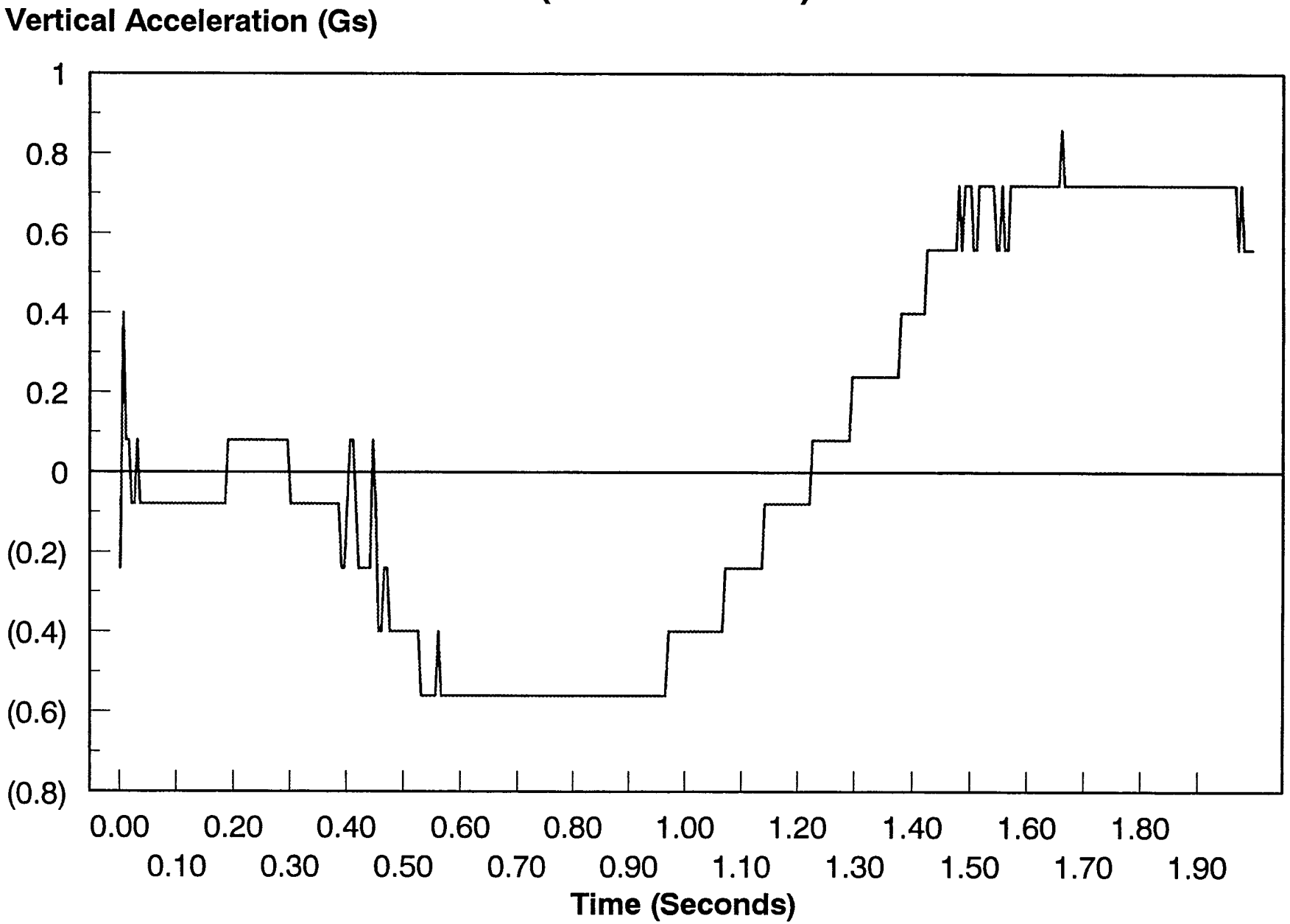

Peak Y-Axis Event during Rail Transport
(17 June 1997)

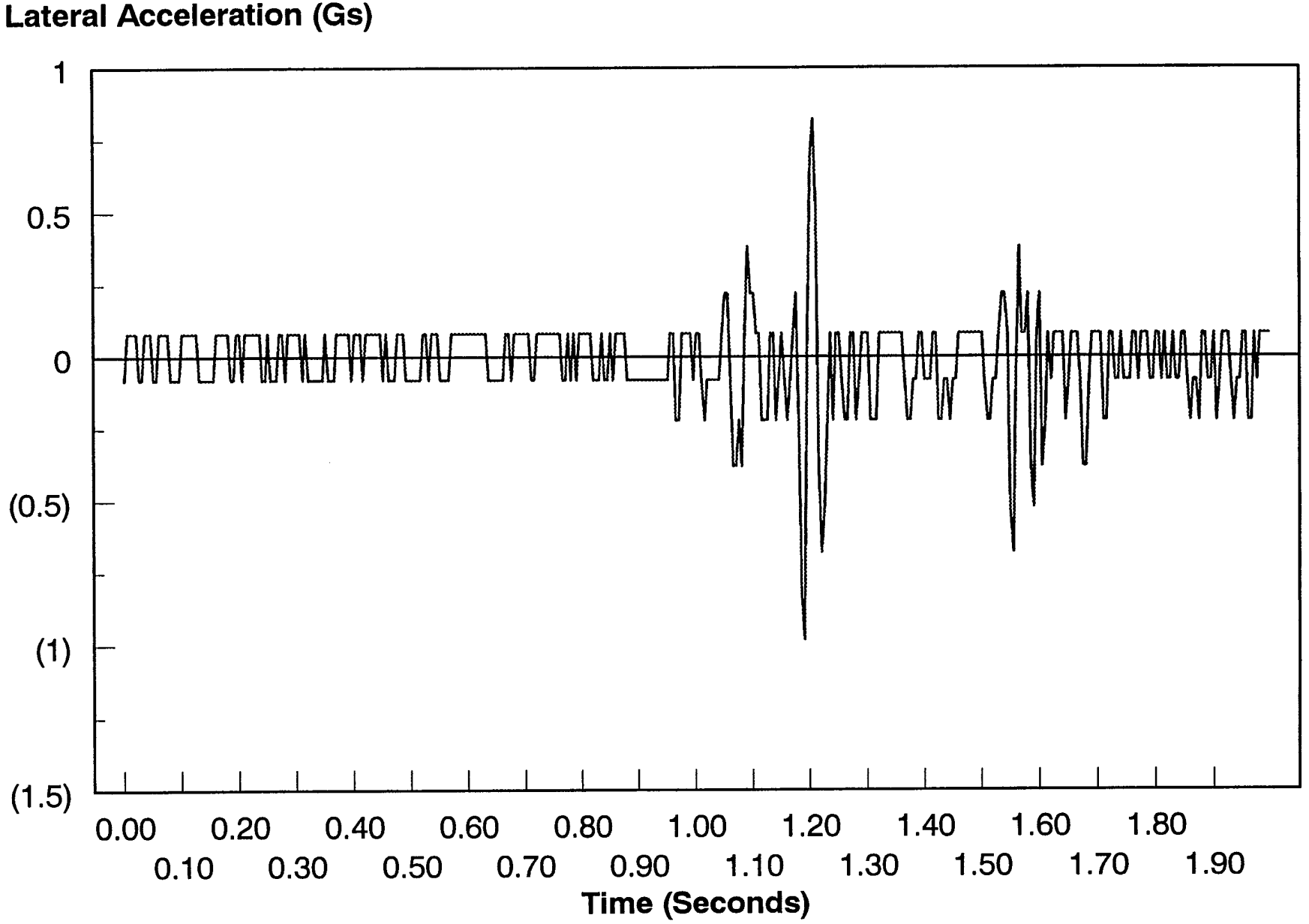

Peak Y-Axis Event during Rail Transport
(17 June 1997)

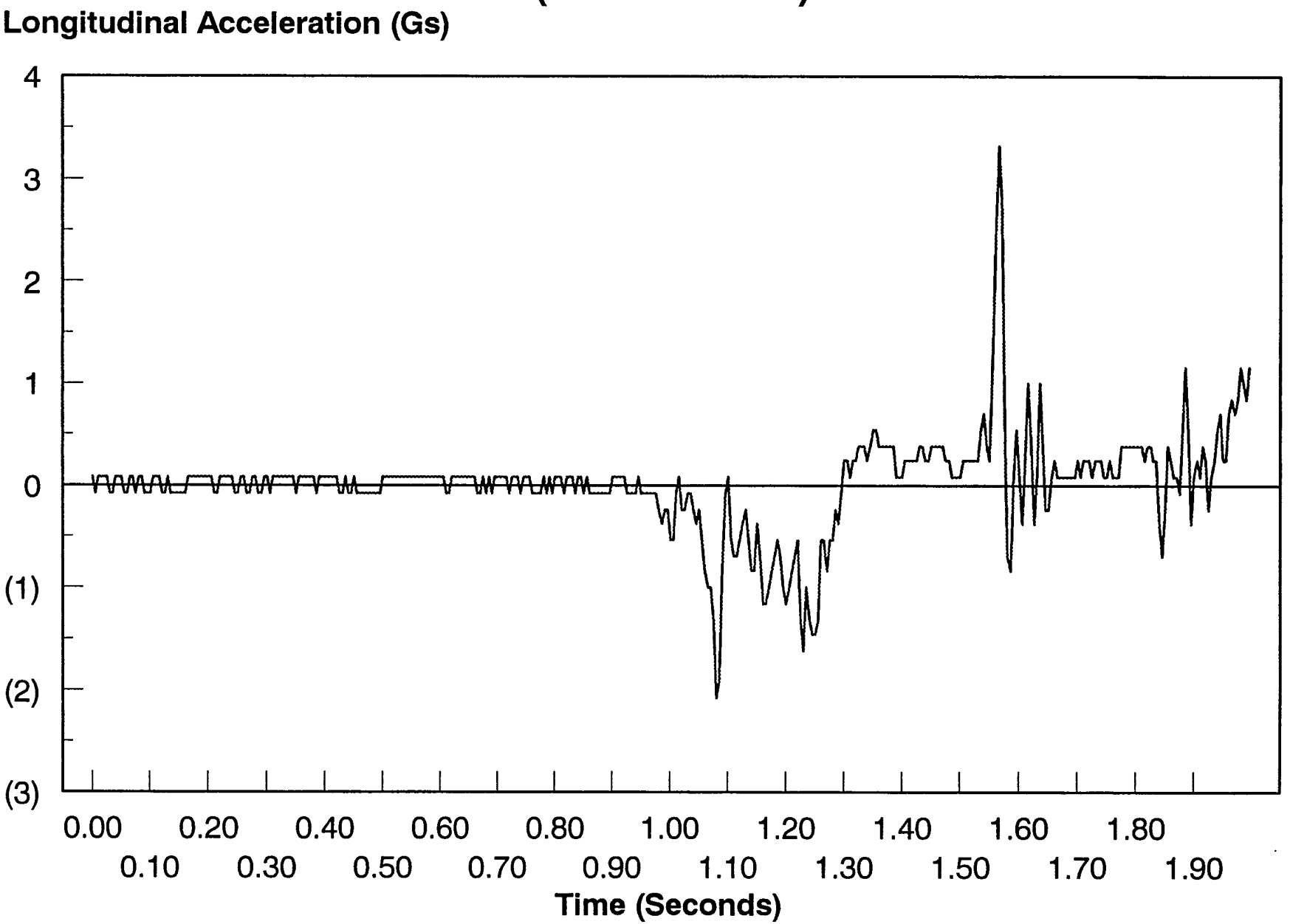

Peak Y-Axis Event during Rail Transport (17 June 1997)

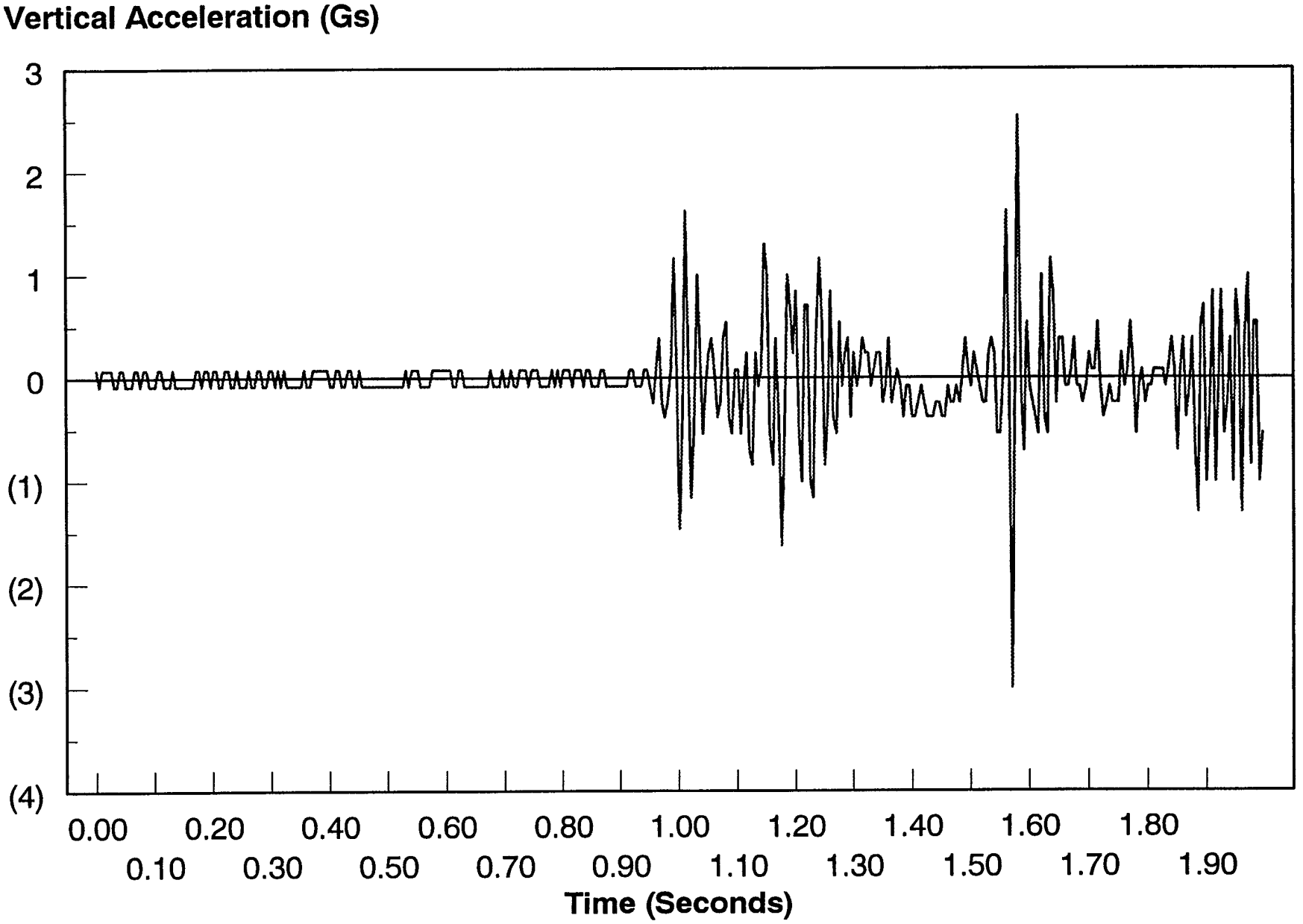

Peak Z-Axis Event during Rail Transport (15 June 1997)

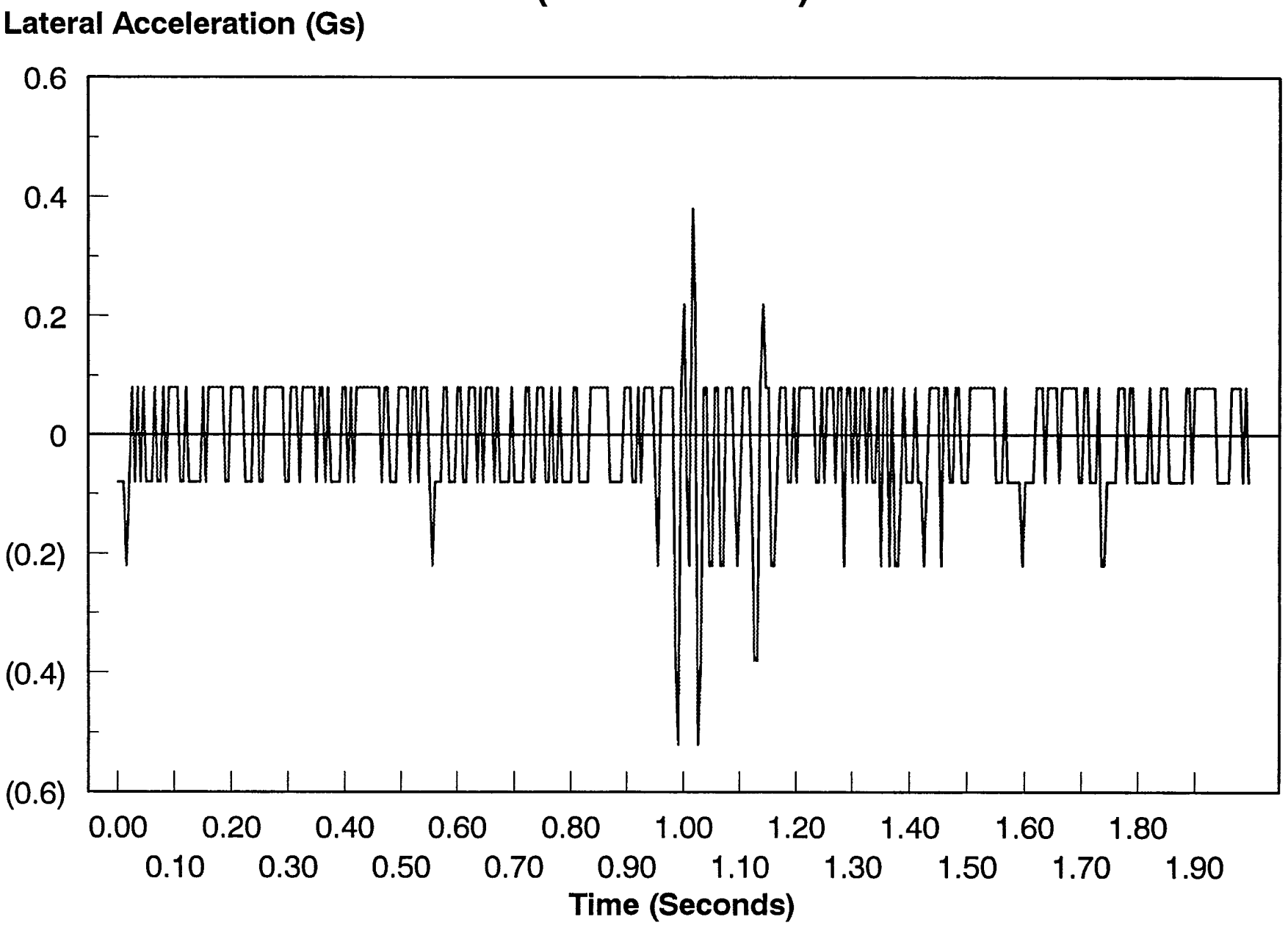

Peak Z-Axis Event during Rail Transport
(15 June 1997)

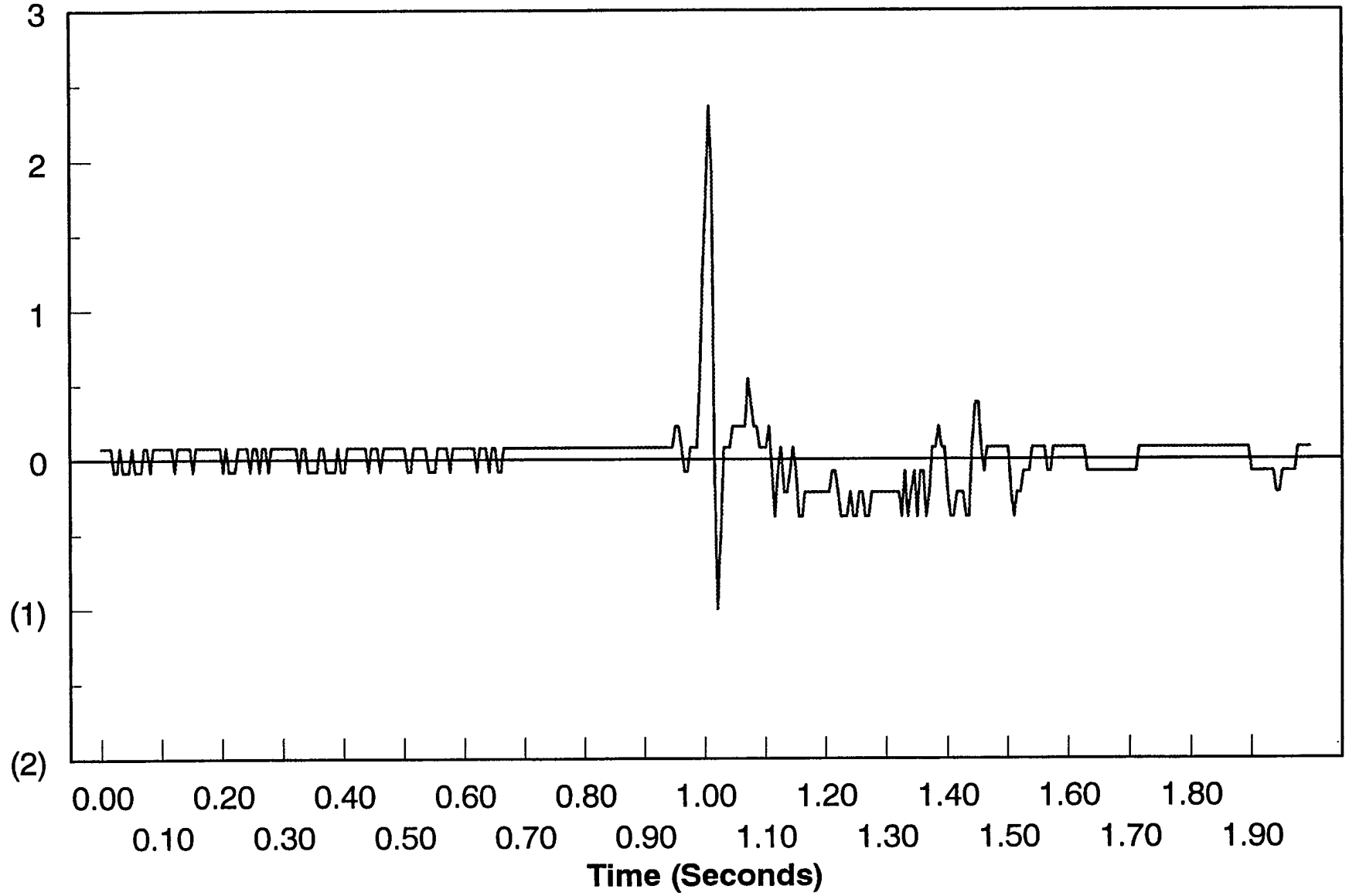

Peak Z-Axis Event during Rail Transport
(15 June 1997)

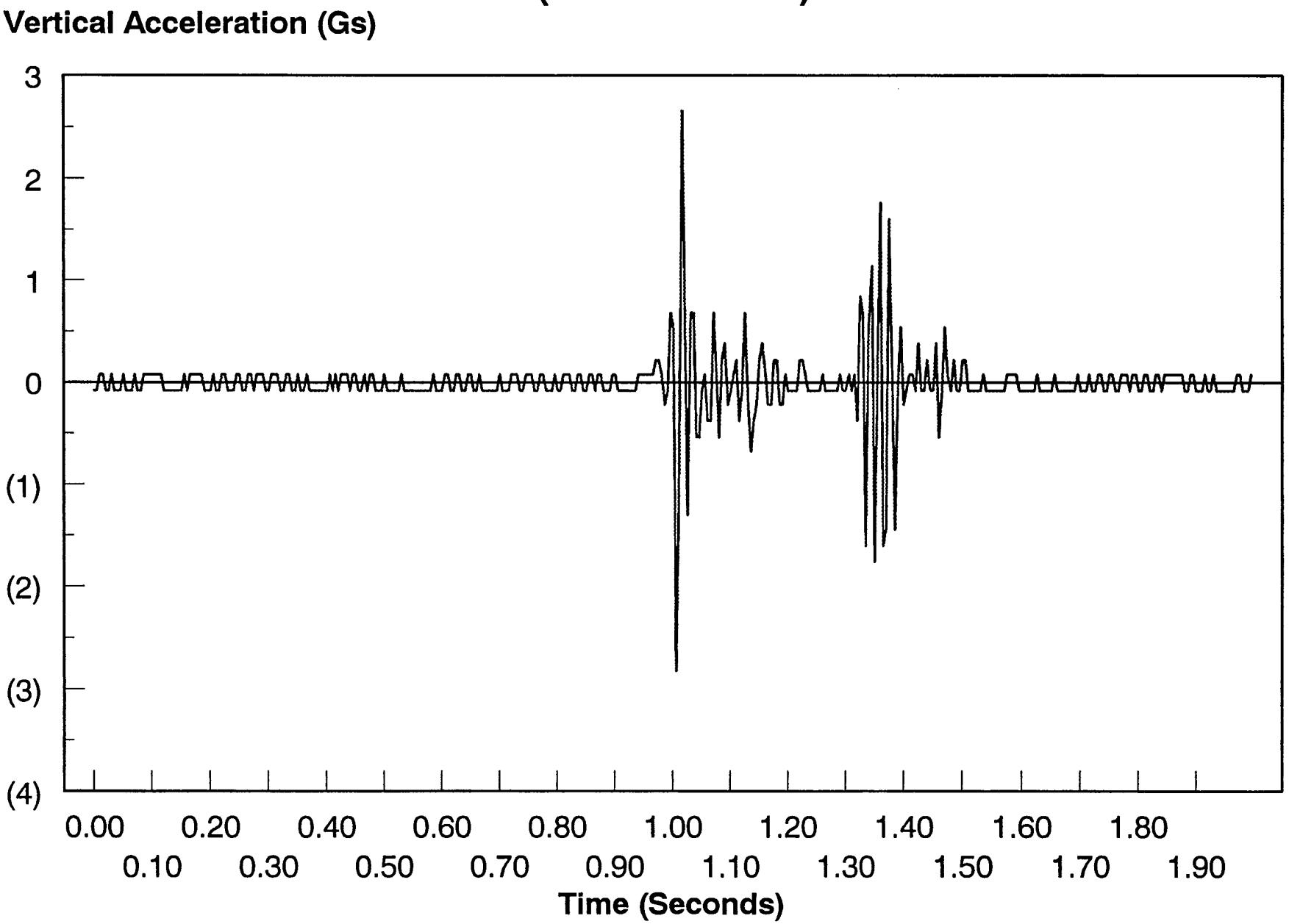

Temperature during Rail Transport
(05 June - 30 June 1997)

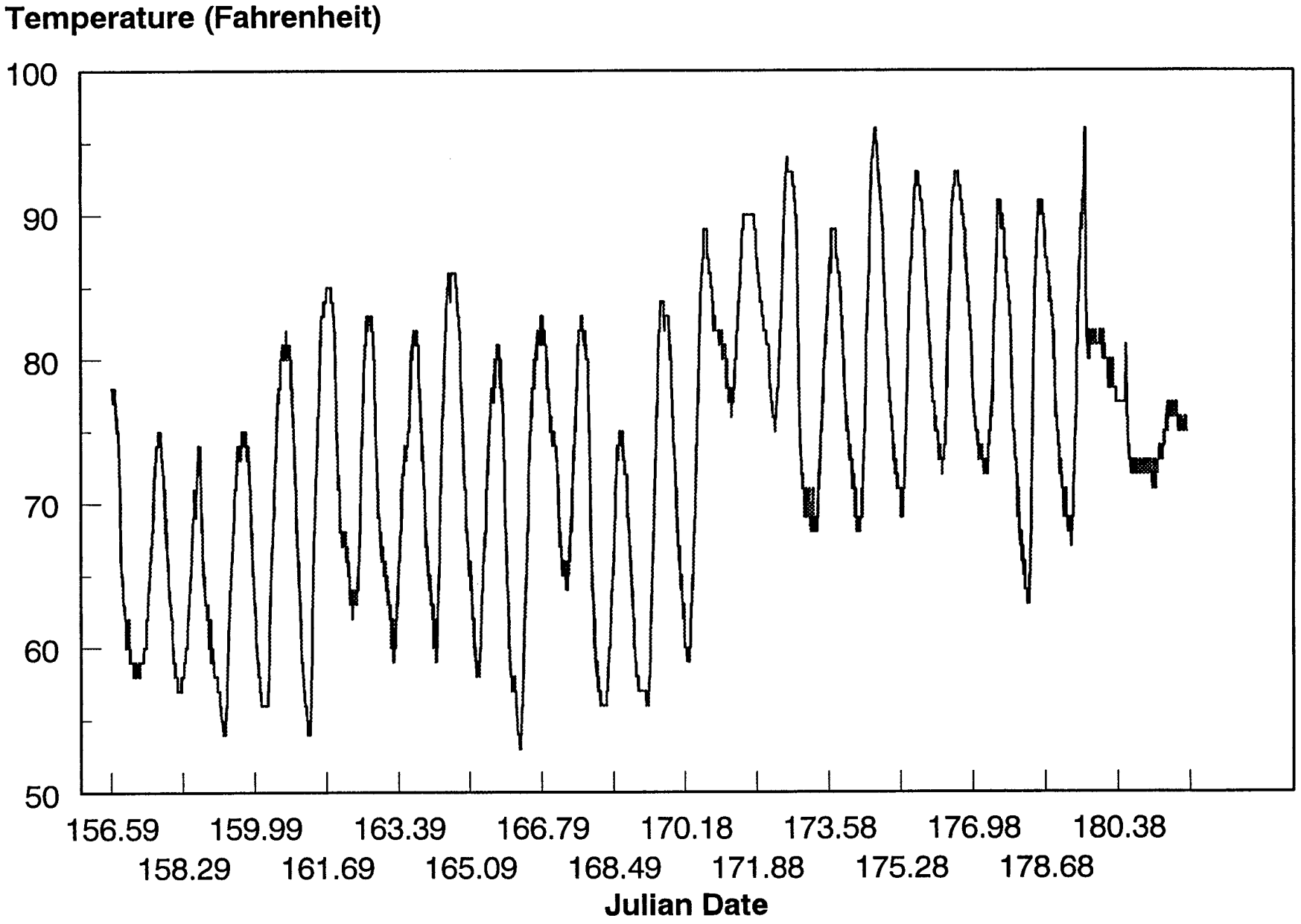

Humidity during Rail Transport
(05 June - 30 June 1997)

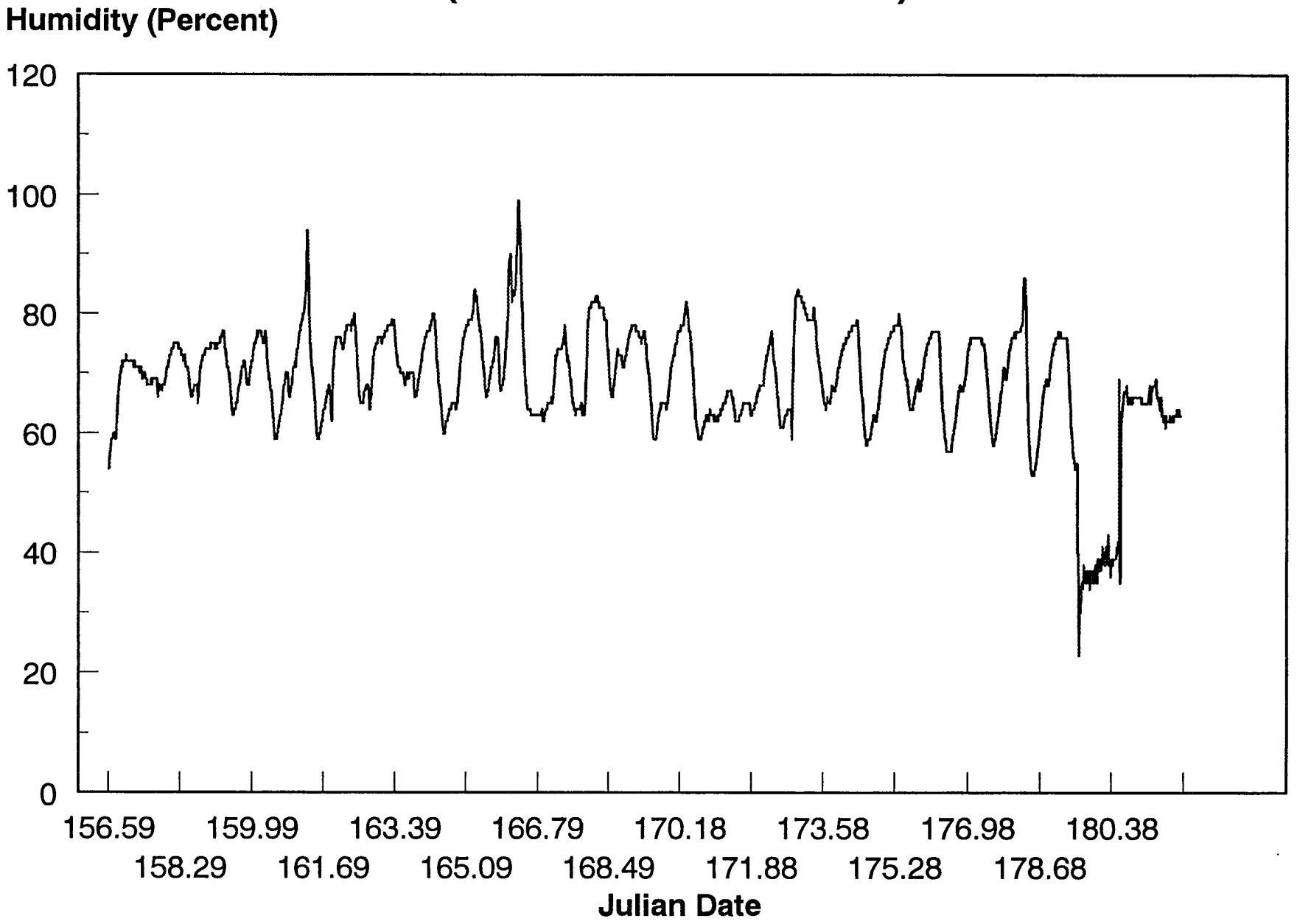

PART 6

MINIMUM AND MAXIMUM VALUES BY EVENT

HIGHWAY

Shock/Vibration Report by Event							
Event Date	Event Time	Min. X-Axis Lateral	Max. X-Axis Lateral	Min. Y-Axis Longitudinal	Max. Y-Axis Longitudinal	Min. Z-Axis Vertical	Max. Z-Axis Vertical
06/03/97	06:50:04	-0.20	0.06	-0.06	0.06	-0.18	0.32
06/03/97	06:50:10	-0.20	0.06	-0.20	0.06	-0.18	0.32
06/03/97	06:50:21	-0.20	0.06	-0.06	0.06	-0.18	0.32
06/03/97	06:50:27	-0.20	0.06	-0.06	0.06	-0.44	0.32
06/03/97	06:50:54	-0.32	0.58	-0.20	0.20	-0.56	0.44
06/03/97	06:51:56	-0.46	0.20	-0.20	0.06	-0.32	0.56
06/03/97	06:52:09	-0.46	0.46	-0.32	0.32	-0.32	0.56
06/03/97	06:52:32	-0.32	0.20	-0.20	0.20	-0.44	0.32
06/03/97	06:54:35	-0.32	0.20	-0.20	0.06	-0.70	0.70
06/03/97	06:54:50	-0.20	0.06	-0.06	0.06	-0.32	0.32
06/03/97	06:55:14	-0.32	0.20	-0.20	0.06	-0.56	0.44
06/03/97	06:55:23	-0.20	0.06	-0.20	0.32	-0.44	0.32
06/03/97	06:55:29	-0.20	0.06	-0.20	0.20	-0.44	0.18
06/03/97	06:55:34	-0.46	0.46	-0.46	0.32	-0.70	0.70
06/03/97	06:56:27	-0.58	0.46	-0.46	0.32	-0.94	1.08
06/03/97	07:48:47	-0.32	0.20	-0.32	0.20	-0.82	0.94
06/03/97	07:49:03	-0.32	0.20	-0.20	0.20	-0.56	0.56
06/03/97	07:49:38	-0.32	0.20	-0.20	0.20	-0.82	0.44
06/03/97	07:52:02	-0.20	0.20	-0.32	0.20	-0.44	0.70
06/03/97	07:58:23	-0.20	0.06	-0.32	0.32	-0.70	0.32
06/03/97	08:03:55	-0.20	0.06	-0.20	0.06	-0.44	0.32
06/03/97	08:09:32	-0.32	0.06	-0.20	0.06	-0.44	0.32
06/03/97	08:11:24	-0.32	0.20	-0.20	0.06	-0.32	0.18
06/03/97	08:11:40	-0.32	0.20	-0.20	0.20	-0.32	0.32
06/03/97	08:12:01	-0.32	0.20	-0.20	0.20	-0.18	0.32
06/03/97	08:15:46	-0.46	0.06	-0.32	0.20	-0.44	0.70
06/03/97	08:15:51	-0.20	0.06	-0.20	0.06	-0.32	0.32
06/03/97	08:16:12	-0.20	0.20	-0.06	0.06	-0.32	0.32
06/03/97	08:16:18	-0.20	0.06	-0.06	0.06	-0.44	0.32
06/03/97	08:16:36	-0.20	0.06	-0.20	0.06	-0.18	0.32
06/03/97	08:16:46	-0.20	0.06	-0.06	0.06	-0.32	0.18
06/03/97	08:17:02	-0.20	0.06	-0.20	0.06	-0.44	0.32
06/03/97	08:17:07	-0.32	0.20	-0.32	0.20	-0.44	0.32
06/03/97	08:17:26	-0.20	0.06	-0.20	0.06	-0.32	0.32
06/03/97	08:17:37	-0.20	0.06	-0.20	0.06	-0.32	0.44
06/03/97	08:17:46	-0.20	0.06	-0.20	0.20	-0.32	0.32
06/03/97	08:17:57	-0.20	0.06	-0.20	0.06	-0.32	0.32
06/03/97	08:18:04	-0.32	0.20	-0.20	0.20	-0.56	0.32

Shock/Vibration Report by Event							
Event Date	Event Time	Min. X-Axis Lateral	Max. X-Axis Lateral	Min. Y-Axis Longitudinal	Max. Y-Axis Longitudinal	Min. Z-Axis Vertical	Max. Z-Axis Vertical
06/03/97	08:18:09	-0.20	0.06	-0.20	0.06	-0.44	0.32
06/03/97	08:18:17	-0.32	0.20	-0.20	0.20	-0.32	0.32
06/03/97	08:18:22	-0.20	0.06	-0.20	0.06	-0.32	0.18
06/03/97	08:18:28	-0.20	0.06	-0.20	0.06	-0.44	0.44
06/03/97	08:18:33	-0.20	0.06	-0.32	0.20	-0.32	0.18
06/03/97	08:18:55	-0.20	0.06	-0.06	0.06	-0.32	0.32
06/03/97	08:19:01	-0.20	0.06	-0.20	0.06	-0.44	0.18
06/03/97	08:19:19	-0.32	0.06	-0.20	0.06	-0.32	0.32
06/03/97	08:19:24	-0.20	0.06	-0.20	0.20	-0.32	0.32
06/03/97	08:19:56	-0.20	0.06	-0.06	0.06	-0.44	0.32
06/03/97	08:20:01	-0.20	0.06	-0.06	0.06	-0.32	0.18
06/03/97	08:20:07	-0.32	0.06	-0.06	0.06	-0.44	0.32
06/03/97	08:20:12	-0.20	0.06	-0.20	0.20	-0.32	0.32
06/03/97	08:20:17	-0.20	0.06	-0.20	0.06	-0.32	0.18
06/03/97	08:20:28	-0.20	0.06	-0.06	0.06	-0.32	0.18
06/03/97	08:20:33	-0.20	0.06	-0.06	0.06	-0.32	0.18
06/03/97	08:20:39	-0.20	0.06	-0.06	0.06	-0.32	0.32
06/03/97	08:20:44	-0.20	0.06	-0.20	0.06	-0.44	0.18
06/03/97	08:20:52	-0.20	0.06	-0.20	0.06	-0.32	0.32
06/03/97	08:20:57	-0.20	0.06	-0.20	0.06	-0.32	0.32
06/03/97	08:21:05	-0.20	0.06	-0.06	0.06	-0.44	0.32
06/03/97	08:21:21	-0.20	0.06	-0.06	0.06	-0.32	0.32
06/03/97	08:21:40	-0.20	0.06	-0.20	0.06	-0.32	0.32
06/03/97	08:21:50	-0.20	0.06	-0.06	0.06	-0.44	0.18
06/03/97	08:21:55	-0.20	0.06	-0.20	0.06	-0.32	0.18
06/03/97	08:22:01	-0.20	0.06	-0.20	0.20	-0.32	0.18
06/03/97	08:22:06	-0.20	0.06	-0.06	0.06	-0.32	0.18
06/03/97	08:22:27	-0.20	0.06	-0.20	0.06	-0.32	0.32
06/03/97	08:22:34	-0.32	0.20	-0.20	0.20	-0.32	0.32
06/03/97	08:22:40	-0.20	0.06	-0.06	0.06	-0.32	0.44
06/03/97	08:22:51	-0.20	0.06	-0.20	0.20	-0.32	0.32
06/03/97	08:23:05	-0.20	0.06	-0.20	0.06	-0.32	0.32
06/03/97	08:23:10	-0.20	0.06	-0.06	0.06	-0.32	0.32
06/03/97	08:23:42	-0.32	0.06	-0.20	0.06	-0.32	0.18
06/03/97	08:23:53	-0.20	0.06	-0.20	0.06	-0.32	0.18
06/03/97	08:23:58	-0.20	0.06	-0.06	0.06	-0.32	0.32
06/03/97	08:24:27	-0.20	0.06	-0.20	0.06	-0.44	0.44
06/03/97	08:25:20	-0.20	0.06	-0.06	0.06	-0.32	0.32
06/03/97	08:27:35	-0.20	0.06	-0.20	0.06	-0.32	0.32
06/03/97	08:27:40	-0.20	0.06	-0.20	0.20	-0.44	0.18
06/03/97	08:27:46	-0.20	0.06	-0.20	0.06	-0.44	0.32
06/03/97	08:27:51	-0.20	0.06	-0.20	0.06	-0.32	0.18
06/03/97	08:27:56	-0.20	0.06	-0.20	0.06	-0.44	0.32
06/03/97	08:28:03	-0.32	0.06	-0.20	0.06	-0.44	0.44
06/03/97	08:28:09	-0.20	0.06	-0.20	0.06	-0.44	0.18
06/03/97	08:28:14	-0.32	0.06	-0.20	0.06	-0.18	0.56
06/03/97	08:30:38	-0.32	0.06	-0.20	0.06	-0.56	0.32

Shock/Vibration Report by Event							
Event Date	Event Time	Min. X-Axis Lateral	Max. X-Axis Lateral	Min. Y-Axis Longitudinal	Max. Y-Axis Longitudinal	Min. Z-Axis Vertical	Max. Z-Axis Vertical
06/03/97	08:31:57	-0.20	0.20	-0.20	0.20	-0.32	0.18
06/03/97	08:36:00	-0.20	0.06	-0.06	0.06	-0.44	0.44
06/03/97	08:36:20	-0.20	0.06	-0.20	0.06	-0.32	0.18
06/03/97	08:36:46	-0.20	0.06	-0.06	0.06	-0.32	0.18
06/03/97	08:59:06	-0.32	0.20	-0.20	0.20	-0.32	0.18
06/03/97	08:59:17	-0.20	0.20	-0.32	0.32	-0.32	0.56
06/03/97	08:59:22	-0.32	0.20	-0.06	0.06	-0.18	0.32
06/03/97	08:59:54	-0.32	0.20	-0.46	0.46	-0.70	0.56
06/03/97	09:00:00	-0.32	0.06	-0.20	0.06	-0.44	0.32
06/03/97	09:01:06	-0.20	0.06	-0.20	0.06	-0.32	0.18
06/03/97	09:01:17	-0.20	0.06	-0.20	0.06	-0.18	0.32
06/03/97	09:02:02	-0.20	0.06	-0.06	0.06	-0.32	0.18
06/03/97	09:02:08	-0.20	0.06	-0.06	0.06	-0.32	0.32
06/03/97	09:05:44	-0.20	0.06	-0.06	0.06	-0.32	0.32
06/03/97	09:05:50	-0.20	0.06	-0.06	0.06	-0.32	0.32
06/03/97	09:06:10	-0.20	0.06	-0.20	0.20	-0.44	0.32
06/03/97	09:07:04	-0.20	0.20	-0.20	0.06	-0.32	0.18
06/03/97	09:07:37	-0.20	0.06	-0.20	0.06	-0.32	0.44
06/03/97	09:10:39	-0.32	0.32	-0.20	0.06	-0.44	0.32
06/03/97	09:10:52	-0.32	0.32	-0.32	0.20	-0.56	0.56
06/03/97	09:11:04	-0.20	0.06	-0.32	0.20	-0.56	0.56
06/03/97	09:11:32	-0.20	0.06	-0.06	0.06	-0.32	0.32
06/03/97	09:11:41	-0.20	0.06	-0.20	0.06	-0.44	0.44
06/03/97	09:11:48	-0.20	0.06	-0.06	0.06	-0.32	0.18
06/03/97	09:11:53	-0.20	0.06	-0.06	0.06	-0.32	0.32
06/03/97	09:11:58	-0.20	0.06	-0.06	0.06	-0.44	0.32
06/03/97	09:12:04	-0.20	0.06	-0.06	0.06	-0.44	0.32
06/03/97	09:12:23	-0.20	0.06	-0.20	0.06	-0.32	0.18
06/03/97	09:12:28	-0.20	0.20	-0.20	0.20	-0.32	0.44
06/03/97	09:12:33	-0.20	0.06	-0.20	0.06	-0.44	0.32
06/03/97	09:12:38	-0.20	0.06	-0.06	0.06	-0.32	0.18
06/03/97	09:12:59	-0.20	0.06	-0.20	0.06	-0.44	0.32
06/03/97	09:13:05	-0.20	0.06	-0.32	0.20	-0.44	0.32
06/03/97	09:13:17	-0.20	0.06	-0.20	0.06	-0.70	0.56
06/03/97	09:13:22	-0.20	0.06	-0.20	0.06	-0.44	0.32
06/03/97	09:13:28	-0.20	0.06	-0.06	0.06	-0.32	0.32
06/03/97	09:13:34	-0.20	0.06	-0.06	0.06	-0.44	0.18
06/03/97	09:13:41	-0.20	0.06	-0.20	0.06	-0.44	0.32
06/03/97	09:13:53	-0.20	0.06	-0.20	0.06	-0.32	0.18
06/03/97	09:13:58	-0.20	0.06	-0.06	0.06	-0.32	0.18
06/03/97	09:14:03	-0.32	0.06	-0.06	0.06	-0.44	0.56
06/03/97	09:14:09	-0.20	0.06	-0.06	0.06	-0.32	0.32
06/03/97	09:14:29	-0.20	0.06	-0.06	0.06	-0.32	0.32
06/03/97	09:14:40	-0.20	0.06	-0.20	0.06	-0.44	0.32
06/03/97	09:14:45	-0.20	0.06	-0.20	0.06	-0.44	0.32
06/03/97	09:14:50	-0.20	0.06	-0.20	0.06	-0.32	0.32
06/03/97	09:14:55	-0.20	0.06	-0.06	0.06	-0.44	0.32

Shock/Vibration Report by Event							
Event Date	Event Time	Min. X-Axis Lateral	Max. X-Axis Lateral	Min. Y-Axis Longitudinal	Max. Y-Axis Longitudinal	Min. Z-Axis Vertical	Max. Z-Axis Vertical
06/03/97	09:15:01	-0.20	0.06	-0.20	0.06	-0.44	0.44
06/03/97	09:15:06	-0.32	0.20	-0.20	0.06	-0.44	0.18
06/03/97	09:16:17	-0.20	0.06	-0.20	0.06	-0.32	0.32
06/03/97	09:16:50	-0.20	0.06	-0.20	0.06	-0.32	0.18
06/03/97	09:17:14	-0.20	0.06	-0.20	0.06	-0.32	0.18
06/03/97	09:17:24	-0.20	0.20	-0.20	0.06	-0.44	0.18
06/03/97	09:17:30	-0.20	0.06	-0.20	0.06	-0.32	0.18
06/03/97	09:17:35	-0.20	0.06	-0.06	0.06	-0.32	0.44
06/03/97	09:17:47	-0.20	0.06	-0.06	0.06	-0.32	0.18
06/03/97	09:17:58	-0.20	0.06	-0.20	0.06	-0.56	0.44
06/03/97	09:18:03	-0.20	0.06	-0.06	0.06	-0.32	0.32
06/03/97	09:18:08	-0.20	0.06	-0.20	0.06	-0.32	0.32
06/03/97	09:18:32	-0.20	0.06	-0.06	0.06	-0.32	0.32
06/03/97	09:18:48	-0.20	0.06	-0.20	0.06	-0.32	0.32
06/03/97	09:19:06	-0.20	0.06	-0.06	0.06	-0.44	0.32
06/03/97	09:19:17	-0.32	0.06	-0.20	0.06	-0.32	0.32
06/03/97	09:19:22	-0.20	0.06	-0.20	0.06	-0.32	0.32
06/03/97	09:19:50	-0.20	0.06	-0.20	0.06	-0.44	0.18
06/03/97	09:20:09	-0.20	0.06	-0.06	0.06	-0.32	0.32
06/03/97	09:20:15	-0.20	0.06	-0.06	0.06	-0.32	0.18
06/03/97	09:20:25	-0.20	0.06	-0.20	0.06	-0.32	0.32
06/03/97	09:20:31	-0.20	0.06	-0.06	0.06	-0.44	0.18
06/03/97	09:20:45	-0.20	0.06	-0.20	0.06	-0.44	0.44
06/03/97	09:20:51	-0.20	0.06	-0.06	0.06	-0.32	0.32
06/03/97	09:20:56	-0.20	0.06	-0.06	0.06	-0.44	0.18
06/03/97	09:21:08	-0.20	0.06	-0.20	0.06	-0.44	0.32
06/03/97	09:21:15	-0.20	0.06	-0.06	0.06	-0.32	0.32
06/03/97	09:21:20	-0.20	0.06	-0.20	0.06	-0.32	0.18
06/03/97	09:21:38	-0.20	0.06	-0.06	0.06	-0.32	0.18
06/03/97	09:22:00	-0.32	0.20	-0.20	0.06	-0.70	0.70
06/03/97	09:22:06	-0.20	0.06	-0.06	0.06	-0.32	0.32
06/03/97	09:22:11	-0.20	0.06	-0.20	0.06	-0.44	0.32
06/03/97	09:22:17	-0.32	0.06	-0.20	0.06	-0.32	0.44
06/03/97	09:22:22	-0.20	0.20	-0.06	0.06	-0.32	0.18
06/03/97	09:22:28	-0.20	0.06	-0.06	0.06	-0.32	0.44
06/03/97	09:22:33	-0.20	0.06	-0.32	0.20	-0.32	0.32
06/03/97	09:22:39	-0.20	0.06	-0.06	0.06	-0.44	0.32
06/03/97	09:22:44	-0.20	0.06	-0.20	0.06	-0.44	0.44
06/03/97	09:22:49	-0.32	0.20	-0.06	0.06	-0.32	0.32
06/03/97	09:23:28	-0.20	0.06	-0.20	0.06	-0.32	0.32
06/03/97	09:23:41	-0.20	0.06	-0.20	0.06	-0.44	0.44
06/03/97	09:23:58	-0.32	0.20	-0.20	0.20	-0.44	0.32
06/03/97	09:25:01	-0.20	0.20	-0.06	0.20	-0.44	0.18
06/03/97	09:26:53	-0.32	0.20	-0.20	0.20	-0.44	0.44
06/03/97	09:27:14	-0.20	0.06	-0.20	0.20	-0.44	0.32
06/03/97	09:29:54	-0.20	0.06	-0.20	0.06	-0.32	0.32
06/03/97	09:31:20	-0.20	0.20	-0.20	0.20	-0.44	0.44

Shock/Vibration Report by Event							
Event Date	Event Time	Min. X-Axis Lateral	Max. X-Axis Lateral	Min. Y-Axis Longitudinal	Max. Y-Axis Longitudinal	Min. Z-Axis Vertical	Max. Z-Axis Vertical
06/03/97	09:31:59	-0.20	0.06	-0.06	0.06	-0.44	0.44
06/03/97	09:33:02	-0.20	0.06	-0.06	0.06	-0.32	0.18
06/03/97	09:34:52	-0.20	0.06	-0.06	0.06	-0.32	0.32
06/03/97	09:36:19	-0.20	0.06	-0.20	0.20	-0.44	0.56
06/03/97	09:42:01	-0.20	0.20	-0.20	0.20	-0.56	0.18
06/03/97	09:42:24	-0.20	0.06	-0.20	0.06	-0.32	0.32
06/03/97	09:42:29	-0.20	0.06	-0.06	0.06	-0.32	0.18
06/03/97	09:42:41	-0.20	0.06	-0.20	0.20	-0.32	0.32
06/03/97	09:42:46	-0.20	0.06	-0.06	0.06	-0.32	0.32
06/03/97	09:42:52	-0.20	0.06	-0.06	0.06	-0.32	0.32
06/03/97	09:42:57	-0.20	0.06	-0.20	0.06	-0.44	0.44
06/03/97	09:43:03	-0.20	0.06	-0.20	0.06	-0.44	0.32
06/03/97	09:43:08	-0.20	0.06	-0.20	0.06	-0.32	0.56
06/03/97	09:43:16	-0.20	0.06	-0.20	0.06	-0.32	0.32
06/03/97	09:43:21	-0.20	0.06	-0.06	0.06	-0.32	0.32
06/03/97	09:43:34	-0.20	0.06	-0.20	0.06	-0.32	0.18
06/03/97	09:43:40	-0.20	0.06	-0.20	0.06	-0.44	0.44
06/03/97	09:43:47	-0.20	0.06	-0.20	0.20	-0.44	0.18
06/03/97	09:43:54	-0.32	0.20	-0.32	0.32	-0.44	0.32
06/03/97	09:44:04	-0.20	0.06	-0.06	0.06	-0.32	0.32
06/03/97	09:44:10	-0.20	0.06	-0.20	0.06	-0.32	0.32
06/03/97	09:44:21	-0.20	0.06	-0.06	0.06	-0.32	0.18
06/03/97	09:44:42	-0.20	0.06	-0.20	0.20	-0.56	0.44
06/03/97	09:45:06	-0.20	0.06	-0.20	0.32	-0.56	0.32
06/03/97	09:45:36	-0.32	0.20	-0.20	0.20	-0.32	0.18
06/03/97	09:45:51	-0.20	0.06	-0.20	0.06	-0.32	0.32
06/03/97	09:46:59	-0.20	0.06	-0.06	0.06	-0.44	0.32
06/03/97	09:47:18	-0.20	0.06	-0.06	0.06	-0.32	0.18
06/03/97	09:47:29	-0.20	0.20	-0.32	0.06	-0.32	0.32
06/03/97	09:47:40	-0.32	0.06	-0.20	0.06	-0.18	0.56
06/03/97	09:47:52	-0.20	0.06	-0.20	0.06	-0.32	0.18
06/03/97	09:47:58	-0.32	0.06	-0.20	0.06	-0.44	0.32
06/03/97	09:48:08	-0.20	0.06	-0.06	0.06	-0.32	0.32
06/03/97	09:48:24	-0.32	0.20	-0.20	0.06	-0.32	0.32
06/03/97	09:48:29	-0.20	0.20	-0.20	0.06	-0.32	0.18
06/03/97	09:48:41	-0.20	0.06	-0.20	0.06	-0.32	0.32
06/03/97	09:48:46	-0.20	0.06	-0.20	0.20	-0.32	0.32
06/03/97	09:48:52	-0.32	0.20	-0.20	0.20	-0.32	0.32
06/03/97	09:48:57	-0.20	0.06	-0.20	0.20	-0.32	0.32
06/03/97	09:49:04	-0.32	0.06	-0.20	0.20	-0.44	0.18
06/03/97	09:49:10	-0.32	0.20	-0.20	0.06	-0.32	0.44
06/03/97	09:49:18	-0.32	0.32	-0.20	0.20	-0.32	0.32
06/03/97	09:49:23	-0.20	0.20	-0.20	0.06	-0.44	0.32
06/03/97	09:49:29	-0.32	0.20	-0.20	0.20	-0.32	0.32
06/03/97	09:49:34	-0.20	0.06	-0.20	0.20	-0.32	0.18
06/03/97	09:49:42	-0.32	0.20	-0.20	0.06	-0.32	0.18
06/03/97	09:49:47	-0.32	0.06	-0.20	0.20	-0.44	0.44

Shock/Vibration Report by Event							
Event Date	Event Time	Min. X-Axis Lateral	Max. X-Axis Lateral	Min. Y-Axis Longitudinal	Max. Y-Axis Longitudinal	Min. Z-Axis Vertical	Max. Z-Axis Vertical
06/03/97	09:49:52	-0.20	0.06	-0.20	0.06	-0.32	0.18
06/03/97	09:49:57	-0.32	0.20	-0.20	0.20	-0.44	0.18
06/03/97	09:50:06	-0.20	0.06	-0.20	0.20	-0.32	0.32
06/03/97	09:50:11	-0.32	0.20	-0.20	0.06	-0.32	0.18
06/03/97	09:50:17	-0.20	0.06	-0.20	0.20	-0.32	0.32
06/03/97	09:50:22	-0.20	0.06	-0.20	0.20	-0.32	0.18
06/03/97	09:50:34	-0.32	0.20	-0.20	0.20	-0.44	0.32
06/03/97	09:50:43	-0.32	0.20	-0.20	0.06	-0.32	0.32
06/03/97	09:50:54	-0.32	0.20	-0.20	0.20	-0.32	0.56
06/03/97	09:51:00	-0.20	0.06	-0.20	0.06	-0.44	0.18
06/03/97	09:51:06	-0.20	0.06	-0.20	0.06	-0.32	0.32
06/03/97	09:51:18	-0.32	0.20	-0.20	0.20	-0.44	0.18
06/03/97	09:51:23	-0.20	0.20	-0.20	0.20	-0.44	0.32
06/03/97	09:51:29	-0.32	0.20	-0.20	0.20	-0.32	0.32
06/03/97	09:51:47	-0.32	0.20	-0.20	0.20	-0.32	0.32
06/03/97	09:51:53	-0.32	0.06	-0.20	0.20	-0.32	0.32
06/03/97	09:52:07	-0.20	0.06	-0.20	0.06	-0.32	0.18
06/03/97	09:52:17	-0.20	0.06	-0.20	0.20	-0.32	0.32
06/03/97	09:52:26	-0.20	0.06	-0.20	0.06	-0.32	0.32
06/03/97	09:52:37	-0.46	0.20	-0.20	0.20	-0.44	0.56
06/03/97	09:52:47	-0.32	0.06	-0.06	0.06	-0.44	0.32
06/03/97	09:52:58	-0.32	0.20	-0.20	0.06	-0.32	0.32
06/03/97	09:53:03	-0.32	0.20	-0.20	0.06	-0.32	0.18
06/03/97	09:53:19	-0.32	0.20	-0.20	0.20	-0.32	0.18
06/03/97	09:53:31	-0.32	0.20	-0.20	0.06	-0.32	0.18
06/03/97	09:53:36	-0.20	0.06	-0.20	0.06	-0.32	0.32
06/03/97	09:53:43	-0.32	0.06	-0.20	0.06	-0.32	0.18
06/03/97	09:53:48	-0.32	0.06	-0.20	0.20	-0.32	0.32
06/03/97	09:55:53	-0.32	0.20	-0.20	0.06	-0.32	0.18
06/03/97	09:56:06	-0.32	0.06	-0.20	0.20	-0.32	0.44
06/03/97	09:56:14	-0.32	0.20	-0.20	0.20	-0.32	0.32
06/03/97	09:56:38	-0.20	0.20	-0.20	0.06	-0.32	0.18
06/03/97	09:56:44	-0.20	0.06	-0.20	0.20	-0.32	0.32
06/03/97	09:56:51	-0.32	0.20	-0.20	0.06	-0.56	0.56
06/03/97	09:57:30	-0.32	0.20	-0.06	0.06	-0.32	0.32
06/03/97	09:57:41	-0.32	0.20	-0.20	0.06	-0.32	0.32
06/03/97	09:57:54	-0.20	0.06	-0.20	0.20	-0.32	0.32
06/03/97	09:58:15	-0.32	0.06	-0.20	0.06	-0.32	0.18
06/03/97	09:58:20	-0.20	0.20	-0.20	0.06	-0.44	0.18
06/03/97	09:58:26	-0.20	0.06	-0.20	0.06	-0.32	0.32
06/03/97	09:58:41	-0.20	0.20	-0.20	0.06	-0.32	0.44
06/03/97	09:58:47	-0.20	0.20	-0.20	0.20	-0.32	0.44
06/03/97	09:58:52	-0.20	0.20	-0.20	0.20	-0.32	0.18
06/03/97	09:58:57	-0.46	0.06	-0.20	0.06	-0.32	0.32
06/03/97	09:59:02	-0.20	0.06	-0.20	0.06	-0.44	0.18
06/03/97	10:00:31	-0.20	0.06	-0.20	0.06	-0.32	0.18
06/03/97	10:03:59	-0.20	0.06	-0.32	0.20	-0.56	0.82

Shock/Vibration Report by Event							
Event Date	Event Time	Min. X-Axis Lateral	Max. X-Axis Lateral	Min. Y-Axis Longitudinal	Max. Y-Axis Longitudinal	Min. Z-Axis Vertical	Max. Z-Axis Vertical
06/03/97	10:20:59	-0.32	0.06	-0.20	0.20	-0.32	0.18
06/03/97	10:22:09	-0.20	0.06	-0.20	0.06	-0.44	0.32
06/03/97	10:26:35	-0.20	0.06	-0.20	0.06	-0.44	0.18
06/03/97	10:31:19	-0.20	0.06	-0.06	0.06	-0.32	0.32
06/03/97	10:33:33	-0.20	0.06	-0.20	0.20	-0.32	0.32
06/03/97	10:33:38	-0.20	0.06	-0.20	0.20	-0.44	0.32
06/03/97	10:33:51	-0.20	0.06	-0.20	0.20	-0.44	0.18
06/03/97	10:33:57	-0.20	0.06	-0.32	0.32	-0.44	0.18
06/03/97	10:34:07	-0.20	0.06	-0.20	0.06	-0.32	0.18
06/03/97	10:34:18	-0.20	0.06	-0.20	0.20	-0.32	0.44
06/03/97	10:34:41	-0.20	0.06	-0.46	0.20	-0.32	0.18
06/03/97	10:34:49	-0.20	0.06	-0.46	0.32	-0.32	0.32
06/03/97	10:39:19	-0.20	0.06	-0.06	0.06	-0.32	0.32
06/03/97	10:47:49	-0.20	0.06	-0.20	0.06	-0.44	0.32
06/03/97	10:48:04	-0.20	0.06	-0.20	0.06	-0.32	0.32
06/03/97	10:48:51	-0.32	0.20	-0.20	0.20	-0.18	0.18
06/03/97	11:21:14	-0.20	0.06	-0.20	0.06	-0.44	0.18
06/03/97	11:23:56	-0.20	0.06	-0.20	0.06	-0.32	0.32
06/03/97	11:24:29	-0.20	0.06	-0.20	0.20	-0.32	0.32
06/03/97	11:32:06	-0.20	0.20	-0.32	0.20	-0.32	0.32
06/03/97	11:36:21	-0.20	0.20	-0.20	0.06	-0.32	0.32
06/03/97	11:38:57	-0.20	0.06	-0.20	0.06	-0.44	0.32
06/03/97	11:42:23	-0.20	0.06	-0.20	0.20	-0.44	0.44
06/03/97	11:44:27	-0.20	0.06	-0.20	0.20	-0.44	0.18
06/03/97	11:44:49	-0.20	0.06	-0.20	0.20	-0.32	0.32
06/03/97	11:47:57	-0.32	0.06	-0.20	0.06	-0.18	0.32
06/03/97	11:48:03	-0.32	0.20	-0.20	0.20	-0.32	0.18
06/03/97	11:48:08	-0.32	0.32	-0.20	0.32	-0.70	0.44
06/03/97	11:48:13	-0.46	0.20	-0.20	0.20	-0.18	0.32
06/03/97	11:48:19	-0.32	0.32	-0.20	0.20	-0.44	0.44
06/03/97	11:48:51	-0.32	0.20	-0.20	0.06	-0.32	0.32
06/03/97	13:27:34	-0.32	0.20	-0.20	0.06	-0.32	0.18
06/03/97	13:27:43	-0.32	0.20	-0.20	0.06	-0.32	0.32
06/03/97	13:29:29	-0.32	0.06	-0.20	0.06	-0.32	0.18
06/03/97	13:30:28	-0.32	0.20	-0.06	0.06	-0.32	0.32
06/03/97	13:31:01	-0.46	0.20	-0.20	0.20	-0.44	0.70
06/03/97	13:32:20	-0.20	0.06	-0.20	0.06	-0.32	0.18
06/03/97	13:33:39	-0.20	0.06	-0.20	0.20	-0.32	0.32
06/03/97	13:41:49	-0.20	0.20	-0.20	0.06	-0.32	0.32
06/03/97	13:44:02	-0.20	0.06	-0.20	0.20	-0.44	0.44
06/03/97	13:49:48	-0.20	0.06	-0.20	0.20	-0.32	0.44
06/03/97	13:50:02	-0.20	0.06	-0.06	0.06	-0.32	0.18
06/03/97	13:50:14	-0.20	0.06	-0.06	0.06	-0.32	0.32
06/03/97	13:50:19	-0.20	0.06	-0.20	0.06	-0.32	0.32
06/03/97	13:50:25	-0.20	0.06	-0.06	0.06	-0.32	0.18
06/03/97	13:50:45	-0.20	0.06	-0.20	0.06	-0.32	0.18
06/03/97	13:51:15	-0.20	0.06	-0.06	0.06	-0.32	0.18

Shock/Vibration Report by Event							
Event Date	Event Time	Min. X-Axis Lateral	Max. X-Axis Lateral	Min. Y-Axis Longitudinal	Max. Y-Axis Longitudinal	Min. Z-Axis Vertical	Max. Z-Axis Vertical
06/03/97	13:51:32	-0.20	0.06	-0.06	0.06	-0.32	0.44
06/03/97	13:51:43	-0.58	0.46	-0.46	0.46	-0.44	0.56
06/03/97	13:51:51	-0.20	0.06	-0.20	0.06	-0.32	0.32
06/03/97	13:52:13	-0.20	0.06	-0.06	0.06	-0.18	0.32
06/03/97	13:52:34	-0.20	0.06	-0.20	0.20	-0.32	0.32
06/03/97	13:52:44	-0.20	0.06	-0.20	0.06	-0.32	0.32
06/03/97	13:53:07	-0.32	0.20	-0.20	0.20	-0.44	0.32
06/03/97	13:53:23	-0.20	0.06	-0.20	0.06	-0.32	0.32
06/03/97	13:53:29	-0.46	0.32	-0.32	0.32	-0.32	0.32
06/03/97	13:53:59	-0.20	0.06	-0.20	0.20	-0.32	0.32
06/03/97	13:56:24	-0.32	0.20	-0.20	0.06	-0.32	0.32
06/03/97	13:56:54	-0.20	0.06	-0.06	0.06	-0.32	0.32
06/03/97	13:58:41	-0.20	0.06	-0.20	0.06	-0.32	0.32
06/03/97	14:05:07	-0.20	0.06	-0.20	0.06	-0.32	0.32
06/03/97	14:05:13	-0.20	0.06	-0.32	0.20	-0.82	0.44
06/03/97	14:11:55	-0.20	0.20	-0.20	0.20	-0.32	0.44
06/03/97	14:13:01	-0.32	0.20	-0.20	0.06	-0.20	0.32
06/03/97	14:13:24	-0.20	0.06	-0.20	0.20	-0.44	0.20
06/03/97	14:14:03	-0.32	0.32	-0.20	0.20	-0.32	0.32
06/03/97	14:15:18	-0.20	0.20	-0.20	0.06	-0.32	0.20
06/03/97	14:16:11	-0.20	0.20	-0.20	0.06	-0.32	0.20
06/03/97	14:17:04	-0.20	0.06	-0.20	0.20	-0.32	0.44
06/03/97	14:17:41	-0.20	0.06	-0.06	0.06	-0.32	0.20
06/03/97	14:17:55	-0.20	0.06	-0.20	0.06	-0.32	0.32
06/03/97	14:18:08	-0.20	0.06	-0.20	0.06	-0.32	0.32
06/03/97	14:19:07	-0.20	0.06	-0.20	0.06	-0.32	0.32
06/03/97	14:22:51	-0.32	0.06	-0.06	0.06	-0.32	0.32
06/03/97	14:24:54	-0.20	0.06	-0.20	0.06	-0.32	0.32
06/03/97	14:25:58	-0.20	0.06	-0.20	0.06	-0.32	0.32
06/03/97	14:35:41	-0.20	0.06	-0.20	0.06	-0.32	0.32
06/03/97	14:36:32	-0.20	0.20	-0.20	0.20	-0.44	0.32
06/03/97	14:37:54	-0.32	0.20	-0.32	0.32	-0.58	0.82
06/03/97	14:44:14	-0.20	0.06	-0.20	0.06	-0.44	0.20
06/03/97	14:45:21	-0.20	0.20	-0.20	0.06	-0.32	0.32
06/03/97	14:46:41	-0.20	0.06	-0.06	0.06	-0.44	0.32
06/03/97	14:47:33	-0.20	0.06	-0.20	0.20	-0.32	0.44
06/03/97	14:47:59	-0.20	0.06	-0.32	0.20	-0.32	0.32
06/03/97	14:49:29	-0.20	0.06	-0.20	0.06	-0.32	0.32
06/03/97	14:51:01	-0.20	0.06	-0.20	0.06	-0.44	0.32
06/03/97	14:52:32	-0.20	0.06	-0.20	0.06	-0.44	0.32
06/03/97	14:53:52	-0.20	0.06	-0.20	0.06	-0.32	0.32
06/03/97	14:56:26	-0.20	0.06	-0.32	0.20	-0.44	0.32
06/03/97	14:57:26	-0.20	0.06	-0.06	0.06	-0.32	0.20
06/03/97	15:00:56	-0.20	0.06	-0.20	0.20	-0.32	0.32
06/03/97	15:05:00	-0.20	0.20	-0.20	0.20	-0.44	0.20
06/03/97	15:08:40	-0.32	0.20	-0.06	0.06	-0.20	0.20
06/03/97	15:08:46	-0.58	0.58	-0.46	0.32	-0.58	0.58

Shock/Vibration Report by Event							
Event Date	Event Time	Min. X-Axis Lateral	Max. X-Axis Lateral	Min. Y-Axis Longitudinal	Max. Y-Axis Longitudinal	Min. Z-Axis Vertical	Max. Z-Axis Vertical
06/03/97	15:08:57	-0.32	0.32	-0.20	0.20	-0.32	0.58
06/03/97	15:09:02	-0.32	0.20	-0.32	0.20	-0.32	0.44
06/03/97	15:09:13	-0.20	0.32	-0.20	0.20	-0.58	0.32
06/03/97	15:21:23	-0.20	0.06	-0.06	0.06	-0.32	0.32
06/03/97	15:21:50	-0.20	0.06	-0.20	0.06	-0.44	0.20
06/03/97	15:22:47	-0.20	0.06	-0.20	0.20	-0.58	0.44
06/03/97	15:23:45	-0.20	0.06	-0.20	0.06	-0.32	0.32
06/03/97	15:24:46	-0.32	0.20	-0.20	0.20	-0.32	0.32
06/03/97	15:43:36	-0.20	0.06	-0.06	0.06	-0.32	0.32
06/03/97	16:05:42	-0.20	0.20	-0.06	0.06	-0.20	0.32
06/03/97	16:08:54	-0.20	0.06	-0.06	0.06	-0.32	0.32
06/03/97	16:10:31	-0.20	0.06	-0.06	0.06	-0.20	0.44
06/03/97	16:10:45	-0.20	0.06	-0.06	0.06	-0.44	0.20
06/03/97	16:10:51	-0.20	0.06	-0.20	0.20	-0.32	0.32
06/03/97	16:10:58	-0.20	0.06	-0.20	0.20	-0.32	0.44
06/03/97	16:43:52	-0.20	0.06	-0.20	0.20	-0.32	0.32
06/03/97	16:43:58	-0.20	0.06	-0.32	0.20	-0.44	0.32
06/03/97	16:44:44	-0.32	0.32	-0.20	0.20	-0.32	0.20
06/03/97	16:49:16	-0.20	0.06	-0.20	0.06	-0.32	0.44
06/03/97	16:49:28	-0.32	0.06	-0.20	0.06	-0.44	0.32
06/03/97	16:50:46	-0.20	0.20	-0.20	0.06	-0.32	0.20
06/03/97	16:50:57	-0.20	0.06	-0.06	0.06	-0.20	0.32
06/03/97	16:51:03	-0.20	0.06	-0.20	0.20	-0.32	0.20
06/03/97	16:56:39	-0.20	0.06	-0.06	0.32	-0.20	0.06
06/03/97	17:19:27	-0.20	0.20	-0.20	0.20	-0.32	0.58
06/03/97	17:22:03	-0.20	0.06	-0.20	0.06	-0.32	0.32
06/03/97	17:22:10	-0.20	0.06	-0.20	0.20	-0.44	0.20
06/03/97	17:23:14	-0.20	0.06	-0.20	0.20	-0.32	0.32
06/03/97	17:23:33	-0.20	0.06	-0.20	0.06	-0.32	0.32
06/03/97	17:24:41	-0.32	0.06	-0.06	0.06	-0.32	0.32
06/03/97	17:32:15	-0.20	0.06	-0.20	0.06	-0.32	0.32
06/03/97	17:32:26	-0.20	0.20	-0.20	0.06	-0.32	0.32
06/03/97	17:36:30	-0.20	0.06	-0.20	0.20	-0.70	0.58
06/03/97	17:49:12	-0.20	0.06	-0.20	0.20	-0.44	0.32
06/03/97	17:53:41	-0.32	0.06	-0.20	0.20	-0.32	0.44
06/03/97	17:55:42	-0.20	0.06	-0.20	0.20	-0.44	0.32
06/03/97	17:56:03	-0.20	0.06	-0.20	0.32	-0.44	0.32
06/03/97	17:56:08	-0.32	0.06	-0.20	0.20	-0.32	0.32
06/03/97	17:56:41	-0.20	0.06	-0.32	0.20	-0.44	0.32
06/03/97	17:56:49	-0.20	0.06	-0.20	0.20	-0.70	0.58
06/03/97	17:58:36	-0.46	0.32	-0.20	0.20	-0.44	0.20
06/03/97	18:03:00	-0.20	0.06	-0.20	0.20	-0.32	0.32
06/03/97	18:52:16	-0.20	0.06	-0.06	0.06	-0.32	0.32
06/03/97	18:53:48	-0.32	0.06	-0.06	0.06	-0.20	0.32
06/03/97	18:57:12	-0.20	0.06	-0.06	0.06	-0.32	0.20

RAIL

Shock/Vibration Report by Event							
Event Date	Event Time	Min. X-Axis Lateral	Max. X-Axis Lateral	Min. Y-Axis Longitudinal	Max. Y-Axis Longitudinal	Min. Z-Axis Vertical	Max. Z-Axis Vertical
06/15/97	01:45:43	-0.22	0.08	-0.08	0.08	-0.84	0.68
06/15/97	01:45:53	-0.22	0.22	-0.08	0.08	-0.84	0.68
06/15/97	01:46:03	-0.22	0.08	-0.22	0.08	-0.98	0.84
06/15/97	01:46:08	-0.22	0.08	-0.08	0.08	-0.84	0.84
06/15/97	01:46:23	-0.22	0.08	-0.08	0.08	-0.98	0.84
06/15/97	01:46:28	-0.22	0.08	-0.08	0.08	-0.84	0.68
06/15/97	01:46:33	-0.22	0.08	-0.08	0.08	-0.98	0.68
06/15/97	01:46:38	-0.22	0.08	-0.08	0.08	-0.84	0.68
06/15/97	01:46:43	-0.22	0.22	-0.08	0.08	-0.98	0.84
06/15/97	01:46:48	-0.22	0.22	-0.08	0.08	-0.84	0.68
06/15/97	01:46:53	-0.22	0.08	-0.08	0.08	-0.84	0.84
06/15/97	01:46:58	-0.22	0.08	-0.08	0.08	-0.84	0.68
06/15/97	01:47:04	-0.22	0.08	-0.08	0.08	-0.84	0.68
06/15/97	01:47:09	-0.22	0.22	-0.08	0.08	-0.84	0.84
06/15/97	01:47:14	-0.22	0.08	-0.08	0.08	-0.84	0.84
06/15/97	01:47:19	-0.22	0.08	-0.08	0.08	-0.84	0.68
06/15/97	01:47:24	-0.22	0.08	-0.08	0.08	-0.84	0.68
06/15/97	01:47:34	-0.22	0.08	-0.08	0.08	-0.84	0.68
06/15/97	01:47:39	-0.22	0.08	-0.08	0.08	-0.98	0.98
06/15/97	01:47:44	-0.22	0.08	-0.08	0.08	-0.98	0.68
06/15/97	01:47:49	-0.22	0.08	-0.08	0.08	-0.84	0.84
06/15/97	01:47:54	-0.22	0.08	-0.22	0.08	-0.84	0.68
06/15/97	01:48:14	-0.22	0.22	-0.22	0.08	-0.84	0.68
06/15/97	01:48:25	-0.22	0.08	-0.08	0.08	-0.84	0.68
06/15/97	01:48:30	-0.22	0.08	-0.08	0.08	-0.84	0.68
06/15/97	01:48:35	-0.22	0.08	-0.08	0.08	-0.84	0.68
06/15/97	01:48:45	-0.22	0.08	-0.08	0.08	-0.68	0.68
06/15/97	01:48:55	-0.22	0.08	-0.22	0.08	-0.84	0.84
06/15/97	01:49:00	-0.22	0.08	-0.08	0.08	-0.84	0.68
06/15/97	01:49:10	-0.22	0.08	-0.08	0.08	-0.98	0.84
06/15/97	01:49:20	-0.22	0.08	-0.08	0.08	-0.84	0.84
06/15/97	01:49:31	-0.22	0.08	-0.08	0.08	-0.84	0.84
06/15/97	01:49:36	-0.22	0.08	-0.08	0.08	-1.14	0.98
06/15/97	01:49:51	-0.38	0.08	-0.08	0.08	-0.84	0.84
06/15/97	01:49:56	-0.22	0.08	-0.08	0.08	-0.98	0.84
06/15/97	01:50:01	-0.22	0.08	-0.08	0.08	-0.84	0.68
06/15/97	01:50:06	-0.22	0.08	-0.08	0.08	-0.84	0.84
06/15/97	01:50:27	-0.22	0.08	-0.08	0.08	-0.98	0.84
06/15/97	02:22:16	-0.38	0.38	-0.22	0.22	-0.98	0.84
06/15/97	02:41:18	-0.22	0.08	-0.08	0.08	-0.84	0.68
06/15/97	02:47:04	-0.22	0.08	-0.08	0.08	-0.98	0.68
06/15/97	02:48:00	-0.22	0.08	-0.08	0.08	-0.84	0.84
06/15/97	02:48:11	-0.22	0.08	-0.22	0.08	-0.98	0.98
06/15/97	02:48:16	-0.38	0.38	-0.08	0.08	-0.68	0.84
06/15/97	02:48:21	-0.22	0.08	-0.08	0.08	-0.98	0.98

Shock/Vibration Report by Event							
Event Date	Event Time	Min. X-Axis Lateral	Max. X-Axis Lateral	Min. Y-Axis Longitudinal	Max. Y-Axis Longitudinal	Min. Z-Axis Vertical	Max. Z-Axis Vertical
06/15/97	02:50:08	-0.22	0.08	-0.08	0.08	-1.14	0.84
06/15/97	02:50:33	-0.22	0.08	-0.08	0.08	-0.84	0.68
06/15/97	02:50:44	-0.22	0.22	-0.08	0.08	-0.84	0.68
06/15/97	02:50:49	-0.22	0.08	-0.22	0.08	-0.84	1.00
06/15/97	02:53:42	-0.22	0.08	-0.08	0.08	-1.14	1.30
06/15/97	02:53:47	-0.22	0.08	-0.08	0.08	-0.84	0.68
06/15/97	02:53:52	-0.22	0.08	-0.08	0.08	-0.84	0.84
06/15/97	02:53:57	-0.22	0.08	-0.08	0.08	-0.98	0.68
06/15/97	02:54:02	-0.38	0.22	-1.00	0.22	-0.84	0.84
06/15/97	02:54:07	-0.22	0.08	-0.22	0.08	-0.84	0.68
06/15/97	02:54:18	-0.22	0.08	-0.08	0.08	-1.00	0.68
06/15/97	02:54:33	-0.22	0.08	-0.08	0.08	-0.98	0.84
06/15/97	02:54:43	-0.22	0.08	-0.08	0.08	-0.98	0.68
06/15/97	02:54:53	-0.22	0.08	-0.08	0.08	-0.84	0.68
06/15/97	02:55:03	-0.22	0.08	-0.22	0.08	-1.00	0.84
06/15/97	02:56:15	-0.38	0.22	-0.22	0.22	-1.44	1.76
06/15/97	02:57:11	-0.38	0.08	-0.08	0.08	-1.00	1.00
06/15/97	03:04:39	-0.22	0.08	-0.22	0.08	-0.98	0.68
06/15/97	03:05:19	-0.22	0.08	-0.08	0.08	-0.98	0.84
06/15/97	03:05:45	-0.22	0.08	-0.08	0.08	-0.98	0.68
06/15/97	03:06:20	-0.22	0.08	-0.22	0.08	-0.84	0.68
06/15/97	03:07:07	-0.22	0.08	-0.08	0.08	-0.84	0.84
06/15/97	03:07:12	-0.22	0.22	-0.38	0.22	-0.98	0.84
06/15/97	03:07:17	-0.38	0.08	-0.08	0.08	-0.98	0.68
06/15/97	03:07:22	-0.22	0.08	-0.08	0.08	-0.84	0.84
06/15/97	03:07:27	-0.22	0.08	-0.08	0.08	-0.84	0.84
06/15/97	03:07:37	-0.22	0.08	-0.22	0.08	-0.98	0.68
06/15/97	03:07:42	-0.22	0.08	-0.08	0.08	-0.98	0.84
06/15/97	03:07:52	-0.22	0.08	-0.08	0.08	-0.98	0.84
06/15/97	03:07:57	-0.22	0.08	-0.08	0.08	-0.98	0.84
06/15/97	03:08:03	-0.22	0.08	-0.08	0.08	-0.98	0.68
06/15/97	03:18:19	-0.22	0.08	-0.08	0.08	-0.98	0.68
06/15/97	03:19:36	-0.22	0.22	-0.38	0.22	-1.14	0.84
06/15/97	03:19:41	-0.38	0.08	-0.22	0.22	-0.98	0.84
06/15/97	03:36:36	-0.38	0.22	-0.22	0.08	-0.98	0.98
06/15/97	03:36:41	-0.38	0.22	-0.22	0.08	-1.44	1.14
06/15/97	03:37:17	-0.22	0.22	-0.08	0.08	-0.84	0.84
06/15/97	03:47:02	-0.38	0.22	-0.08	0.08	-0.84	0.68
06/15/97	03:56:24	-0.38	0.22	-0.22	0.08	-1.14	1.14
06/15/97	07:35:24	-0.38	0.38	-0.22	0.08	-0.98	0.68
06/15/97	07:44:01	-0.52	0.38	-1.00	2.36	-2.82	2.66
06/15/97	08:23:44	-0.22	0.08	-0.22	0.08	-1.00	0.68
06/15/97	08:24:30	-0.22	0.08	-0.22	0.08	-1.14	0.84
06/15/97	08:24:35	-0.22	0.08	-0.22	0.08	-1.00	0.84
06/15/97	08:24:50	-0.22	0.08	-0.08	0.08	-1.00	1.14
06/15/97	08:31:43	-0.22	0.08	-0.08	0.08	-1.00	0.84
06/15/97	08:35:01	-0.22	0.08	-0.08	0.08	-1.00	0.84

Shock/Vibration Report by Event							
Event Date	Event Time	Min. X-Axis Lateral	Max. X-Axis Lateral	Min. Y-Axis Longitudinal	Max. Y-Axis Longitudinal	Min. Z-Axis Vertical	Max. Z-Axis Vertical
06/15/97	08:38:40	-0.22	0.22	-0.22	0.08	-1.00	0.68
06/15/97	08:45:23	-0.22	0.08	-0.08	0.08	-0.84	0.84
06/15/97	08:45:28	-0.22	0.08	-0.08	0.08	-1.14	0.84
06/15/97	08:45:39	-0.22	0.22	-0.08	0.08	-1.00	1.00
06/15/97	08:49:23	-0.22	0.08	-0.08	0.08	-1.00	0.68
06/15/97	08:50:03	-0.38	0.08	-0.08	0.08	-1.00	0.84
06/15/97	08:50:24	-0.22	0.08	-0.08	0.08	-1.00	0.68
06/15/97	08:50:34	-0.22	0.08	-0.24	0.08	-1.00	0.84
06/15/97	08:51:05	-0.22	0.08	-0.24	0.08	-1.14	0.84
06/15/97	08:52:01	-0.22	0.08	-0.24	0.08	-1.00	0.68
06/15/97	08:53:43	-0.22	0.08	-0.24	0.08	-1.00	0.84
06/15/97	08:55:55	-0.38	0.22	-0.24	0.08	-1.14	1.46
06/15/97	08:57:17	-0.38	0.22	-0.24	0.08	-0.84	1.00
06/15/97	08:57:22	-0.22	0.08	-0.08	0.08	-1.00	0.68
06/15/97	08:57:32	-0.22	0.08	-0.24	0.24	-1.00	0.84
06/15/97	08:57:52	-0.22	0.08	-0.08	0.08	-1.00	0.68
06/15/97	08:58:02	-0.22	0.08	-0.08	0.08	-0.84	0.84
06/15/97	08:58:23	-0.22	0.08	-0.24	0.08	-1.00	0.84
06/15/97	09:02:27	-0.22	0.08	-0.08	0.08	-1.14	0.84
06/15/97	09:02:58	-0.22	0.08	-0.24	0.08	-1.00	0.84
06/15/97	09:04:40	-0.22	0.22	-0.08	0.08	-1.14	1.30
06/15/97	09:05:05	-0.38	0.22	-0.24	0.08	-1.00	0.84
06/15/97	09:06:42	-0.22	0.08	-0.08	0.08	-1.00	0.68
06/15/97	09:12:54	-0.22	0.08	-0.24	0.08	-1.14	0.84
06/15/97	09:12:59	-0.22	0.22	-0.24	0.08	-1.00	0.84
06/15/97	09:13:04	-0.22	0.08	-0.08	0.08	-0.84	0.68
06/15/97	09:17:14	-0.22	0.08	-0.24	0.08	-1.30	1.46
06/15/97	09:22:51	-0.52	0.38	-0.24	0.08	-1.60	1.30
06/15/97	10:03:03	-0.52	0.22	-1.16	1.16	-1.30	1.30
06/15/97	10:33:04	-0.38	0.08	-0.08	0.08	-0.84	0.54
06/15/97	10:34:05	-0.38	0.38	-0.24	0.08	-1.00	0.84
06/15/97	10:37:08	-0.38	0.08	-0.08	0.08	-0.84	0.70
06/15/97	10:38:29	-0.38	0.22	-0.08	0.08	-0.84	0.70
06/15/97	10:40:06	-0.52	0.22	-0.08	0.08	-1.00	0.84
06/15/97	10:51:37	-0.52	0.22	-0.24	0.24	-1.92	1.16
06/15/97	14:11:43	-0.38	0.22	-0.24	0.08	-2.10	1.64
06/16/97	12:12:40	-0.22	0.08	-0.38	0.24	-1.32	1.48
06/16/97	12:17:49	-0.54	0.38	-0.24	0.38	-1.00	1.32
06/17/97	08:51:00	-0.68	0.52	-0.22	0.22	-1.90	1.60
06/17/97	09:02:29	-0.38	0.08	-0.22	0.08	-0.68	1.00
06/17/97	09:10:14	-0.38	0.38	-0.22	0.08	-1.30	1.00
06/17/97	20:17:03	-0.98	0.82	-2.08	3.32	-3.00	2.54
06/20/97	01:44:14	-0.22	0.08	-0.24	0.08	-1.18	1.02
06/20/97	01:44:24	-0.22	0.08	-0.08	0.08	-1.02	0.86
06/20/97	04:55:13	-0.54	0.38	-0.24	0.08	-0.86	0.70
06/20/97	04:55:47	-0.38	0.22	-0.24	0.08	-1.32	1.16
06/20/97	04:55:57	-0.22	0.08	-0.08	0.08	-0.86	1.02

Shock/Vibration Report by Event							
Event Date	Event Time	Min. X-Axis Lateral	Max. X-Axis Lateral	Min. Y-Axis Longitudinal	Max. Y-Axis Longitudinal	Min. Z-Axis Vertical	Max. Z-Axis Vertical
06/20/97	04:56:02	-0.54	0.22	-0.24	0.24	-1.64	1.48
06/20/97	04:56:52	-0.38	0.22	-0.24	0.08	-1.48	1.16
06/20/97	07:09:41	-0.84	0.38	-0.24	0.24	-1.02	1.16
06/20/97	07:10:32	-0.38	0.38	-0.24	0.24	-1.16	1.32
06/20/97	07:19:51	-0.54	0.38	-0.24	0.08	-0.86	1.02
06/20/97	07:20:47	-0.22	0.22	-0.24	0.08	-1.02	1.32
06/20/97	07:22:08	-0.84	0.38	-0.40	0.24	-1.48	1.32
06/21/97	03:28:45	-0.22	0.08	-0.24	0.24	-1.48	1.32
06/21/97	03:30:39	-0.54	0.54	-0.24	0.24	-1.64	2.10
06/21/97	03:36:13	-0.38	0.08	-0.24	0.24	-0.86	1.02
06/21/97	03:39:07	-0.38	0.22	-0.24	0.24	-1.32	1.32
06/21/97	03:41:35	-0.22	0.08	-0.08	0.24	-0.86	0.86
06/21/97	03:41:51	-0.22	0.08	-0.08	0.08	-0.86	0.70
06/21/97	03:57:30	-0.22	0.08	-0.08	0.08	-0.86	0.70
06/21/97	03:57:55	-0.38	0.08	-0.08	0.08	-1.02	0.86
06/21/97	04:00:28	-0.22	0.08	-0.08	0.08	-1.02	1.16
06/21/97	04:02:20	-0.22	0.08	-0.08	0.08	-1.02	0.70
06/21/97	04:02:25	-0.22	0.08	-0.08	0.08	-0.86	0.70
06/21/97	04:02:31	-0.22	0.08	-0.08	0.08	-0.86	0.86
06/21/97	04:02:51	-0.22	0.08	-0.08	0.08	-0.86	0.70
06/21/97	04:02:56	-0.38	0.08	-0.24	0.08	-1.16	0.86
06/21/97	04:03:11	-0.38	0.22	-0.24	0.08	-1.02	0.70
06/21/97	04:03:27	-0.22	0.08	-0.08	0.08	-0.86	0.70
06/21/97	04:03:32	-0.38	0.22	-0.08	0.08	-1.02	0.70
06/21/97	04:03:57	-0.22	0.22	-0.08	0.08	-0.86	0.70
06/21/97	04:05:19	-0.54	0.54	-0.24	0.24	-1.80	1.64
06/21/97	04:06:51	-0.22	0.22	-0.08	0.08	-1.02	0.70
06/21/97	04:07:47	-0.54	0.22	-0.08	0.08	-1.02	1.16
06/21/97	04:09:04	-0.38	0.38	-0.24	0.08	-0.86	0.70
06/21/97	04:09:14	-0.22	0.08	-0.24	0.08	-1.02	0.70
06/21/97	04:09:24	-0.38	0.22	-0.08	0.08	-0.86	0.70
06/21/97	04:09:29	-0.22	0.22	-0.24	0.08	-1.02	0.86
06/21/97	04:09:44	-0.22	0.22	-0.08	0.08	-0.86	0.86
06/21/97	04:10:10	-0.38	0.08	-0.24	0.08	-0.86	0.86
06/21/97	04:11:06	-0.38	0.54	-0.08	0.08	-1.02	0.86
06/21/97	04:11:57	-0.38	0.22	-0.24	0.08	-1.02	1.02
06/21/97	04:12:28	-0.38	0.22	-0.24	0.08	-1.02	0.70
06/21/97	04:14:00	-0.38	0.22	-0.08	0.08	-0.70	0.70
06/21/97	04:15:01	-0.68	0.38	-0.24	0.08	-0.70	1.16
06/21/97	04:15:27	-0.38	0.22	-0.24	0.08	-0.70	0.70
06/21/97	04:17:19	-0.38	0.22	-0.24	0.08	-0.70	0.70
06/21/97	04:17:24	-0.22	0.22	-0.08	0.08	-1.02	0.70
06/21/97	04:18:05	-0.54	0.38	-0.24	0.08	-1.02	1.02
06/21/97	04:18:15	-0.54	0.68	-0.24	0.08	-1.02	0.70
06/21/97	04:18:31	-0.38	0.22	-0.24	0.08	-1.16	1.02
06/21/97	04:20:03	-0.38	0.22	-0.24	0.08	-0.86	0.70
06/21/97	04:22:41	-0.22	0.08	-0.24	0.24	-1.02	1.02

Shock/Vibration Report by Event							
Event Date	Event Time	Min. X-Axis Lateral	Max. X-Axis Lateral	Min. Y-Axis Longitudinal	Max. Y-Axis Longitudinal	Min. Z-Axis Vertical	Max. Z-Axis Vertical
06/21/97	04:22:51	-0.54	0.22	-0.24	0.24	-0.54	0.54
06/21/97	04:25:20	-0.38	0.22	-0.08	0.08	-0.54	0.54
06/21/97	04:30:33	-0.38	0.08	-0.24	0.08	-0.86	0.86
06/21/97	04:43:03	-0.22	0.08	-0.08	0.08	-0.86	0.54
06/21/97	04:43:18	-0.22	0.08	-0.08	0.08	-1.02	0.54
06/21/97	04:43:23	-0.38	0.22	-0.08	0.08	-0.70	0.70
06/21/97	04:43:28	-0.22	0.22	-0.08	0.08	-0.70	0.70
06/21/97	04:43:33	-0.22	0.22	-0.24	0.08	-1.02	0.70
06/21/97	04:44:54	-0.22	0.38	-0.08	0.08	-1.02	1.02
06/21/97	04:45:05	-0.22	0.08	-0.08	0.08	-0.86	0.54
06/21/97	04:49:47	-0.38	0.22	-0.08	0.08	-0.86	0.70
06/21/97	04:49:57	-0.22	0.08	-0.08	0.08	-0.86	0.70
06/21/97	04:50:12	-0.38	0.22	-0.08	0.08	-0.86	0.86
06/21/97	04:50:27	-0.38	0.08	-0.08	0.08	-0.86	0.70
06/21/97	04:50:48	-0.38	0.22	-0.08	0.08	-0.86	0.70
06/21/97	04:50:53	-0.38	0.22	-0.24	0.08	-0.86	0.86
06/21/97	04:50:58	-0.38	0.22	-0.08	0.08	-1.02	1.16
06/21/97	04:51:03	-0.22	0.08	-0.08	0.08	-0.86	0.86
06/21/97	04:51:08	-0.38	0.22	-0.08	0.08	-1.02	0.70
06/21/97	04:51:18	-0.38	0.22	-0.08	0.08	-0.86	0.70
06/21/97	04:51:39	-0.38	0.22	-0.08	0.08	-0.86	0.70
06/21/97	04:51:44	-0.38	0.22	-0.08	0.08	-0.86	0.70
06/21/97	04:51:59	-0.54	0.22	-0.08	0.08	-0.86	0.70
06/21/97	04:52:19	-0.22	0.22	-0.08	0.08	-0.86	0.70
06/21/97	04:52:35	-0.54	0.22	-0.08	0.08	-1.02	0.86
06/21/97	04:53:00	-1.14	0.84	-0.24	0.24	-1.64	1.64
06/21/97	04:53:05	-0.68	1.00	-0.24	0.08	-1.16	1.32
06/21/97	04:53:20	-0.38	0.22	-0.08	0.08	-0.86	0.70
06/21/97	04:53:36	-0.38	0.22	-0.24	0.08	-0.70	0.70
06/21/97	04:54:16	-0.38	0.22	-0.08	0.08	-0.86	0.86
06/21/97	04:54:52	-0.38	0.22	-0.24	0.08	-0.86	0.86
06/21/97	04:55:48	-0.38	0.22	-0.08	0.08	-0.70	0.70
06/21/97	04:56:23	-0.38	0.22	-0.08	0.08	-0.70	0.70
06/21/97	04:56:39	-0.38	0.22	-0.24	0.08	-0.86	0.86
06/21/97	04:56:44	-0.38	0.22	-0.08	0.08	-0.86	0.70
06/21/97	04:56:49	-0.38	0.08	-0.08	0.08	-1.02	0.86
06/21/97	04:57:04	-0.38	0.22	-0.24	0.08	-0.86	1.02
06/21/97	04:57:14	-0.38	0.08	-0.24	0.08	-0.70	0.54
06/21/97	04:57:19	-0.38	0.22	-0.24	0.08	-0.86	0.70
06/21/97	04:57:24	-0.54	0.38	-0.24	0.08	-1.94	1.64
06/21/97	04:57:30	-0.38	0.22	-0.08	0.08	-0.86	0.70
06/21/97	04:57:35	-0.38	0.08	-0.08	0.08	-0.86	0.70
06/21/97	04:57:50	-0.38	0.22	-0.24	0.08	-1.02	0.70
06/21/97	04:58:00	-0.22	0.22	-0.08	0.08	-0.86	0.86
06/21/97	04:58:11	-0.38	0.22	-0.08	0.08	-1.02	0.86
06/21/97	04:58:21	-0.38	0.22	-0.24	0.08	-0.70	0.70
06/21/97	04:58:26	-0.38	0.22	-0.08	0.08	-0.70	0.70

Shock/Vibration Report by Event							
Event Date	Event Time	Min. X-Axis Lateral	Max. X-Axis Lateral	Min. Y-Axis Longitudinal	Max. Y-Axis Longitudinal	Min. Z-Axis Vertical	Max. Z-Axis Vertical
06/21/97	04:58:31	-0.38	0.22	-0.24	0.08	-0.86	0.86
06/21/97	04:58:36	-0.38	0.22	-0.08	0.08	-0.86	1.02
06/21/97	04:58:41	-0.38	0.22	-0.24	0.08	-0.86	1.02
06/21/97	04:58:46	-0.84	0.84	-0.24	0.24	-1.02	1.02
06/21/97	04:59:33	-0.38	0.22	-0.24	0.24	-1.02	0.86
06/21/97	04:59:53	-0.54	0.38	-0.24	0.08	-0.86	0.70
06/21/97	04:59:58	-0.38	0.22	-0.08	0.08	-0.70	0.70
06/21/97	05:00:03	-0.38	0.22	-0.08	0.08	-0.86	0.70
06/21/97	05:00:34	-0.38	0.22	-0.08	0.08	-0.86	0.70
06/21/97	05:00:44	-0.38	0.22	-0.08	0.08	-0.86	0.70
06/21/97	05:00:54	-0.38	0.22	-0.08	0.08	-1.02	0.70
06/21/97	05:01:04	-0.38	0.38	-0.24	0.08	-0.86	0.70
06/21/97	05:01:19	-0.38	0.22	-0.08	0.08	-0.86	0.70
06/21/97	05:01:30	-0.38	0.22	-0.24	0.08	-1.02	0.70
06/21/97	05:01:55	-0.38	0.22	-0.08	0.08	-0.86	0.70
06/21/97	05:02:05	-0.38	0.22	-0.08	0.08	-0.86	0.70
06/21/97	05:02:15	-0.22	0.22	-0.08	0.08	-0.86	0.70
06/21/97	05:02:31	-0.38	0.08	-0.08	0.08	-0.86	0.70
06/21/97	05:02:41	-0.38	0.08	-0.08	0.08	-0.86	0.70
06/21/97	05:02:46	-0.38	0.08	-0.08	0.08	-0.86	0.54
06/21/97	05:03:22	-0.38	0.22	-0.08	0.08	-0.70	0.70
06/21/97	05:03:27	-0.38	0.22	-0.08	0.24	-1.16	0.86
06/21/97	05:03:52	-0.38	0.22	-0.08	0.08	-0.86	0.70
06/21/97	05:04:07	-0.54	0.54	-0.08	0.08	-1.02	0.70
06/21/97	05:04:13	-0.38	0.22	-0.24	0.08	-0.86	0.70
06/21/97	05:04:18	-0.22	0.22	-0.08	0.08	-0.70	0.70
06/21/97	05:04:28	-0.38	0.22	-0.24	0.24	-0.86	0.70
06/21/97	05:04:43	-0.38	0.22	-0.24	0.08	-0.86	0.70
06/21/97	05:04:48	-0.38	0.22	-0.08	0.08	-1.02	1.16
06/21/97	05:04:53	-0.38	0.22	-0.08	0.08	-0.86	0.70
06/21/97	05:04:59	-0.22	0.08	-0.08	0.24	-0.70	0.70
06/21/97	05:05:14	-0.38	0.22	-0.08	0.08	-1.02	1.16
06/21/97	05:05:24	-0.38	0.22	-0.24	0.08	-0.86	0.70
06/21/97	05:05:29	-0.38	0.08	-0.08	0.24	-0.70	0.70
06/21/97	05:05:34	-0.38	0.22	-0.24	0.08	-0.86	0.86
06/21/97	05:05:45	-0.38	0.22	-0.08	0.08	-0.86	0.70
06/21/97	05:05:50	-0.38	0.22	-0.08	0.08	-0.86	0.86
06/21/97	05:06:00	-0.38	0.08	-0.08	0.08	-1.02	1.16
06/21/97	05:06:05	-0.38	0.22	-0.08	0.08	-0.86	0.70
06/21/97	05:06:30	-0.38	0.22	-0.08	0.08	-0.86	0.70
06/21/97	05:06:36	-0.54	0.22	-0.24	0.08	-0.86	0.86
06/21/97	05:06:41	-0.38	0.22	-0.08	0.24	-0.70	0.70
06/21/97	05:07:12	-0.54	0.54	-0.24	0.24	-1.02	0.86
06/21/97	05:07:47	-0.38	0.08	-0.08	0.08	-1.02	0.86
06/21/97	05:07:52	-0.22	0.08	-0.08	0.08	-0.86	0.86
06/21/97	05:08:03	-0.22	0.22	-0.08	0.08	-0.86	0.70
06/21/97	05:08:13	-0.38	0.08	-0.08	0.08	-0.70	0.54

Shock/Vibration Report by Event							
Event Date	Event Time	Min. X-Axis Lateral	Max. X-Axis Lateral	Min. Y-Axis Longitudinal	Max. Y-Axis Longitudinal	Min. Z-Axis Vertical	Max. Z-Axis Vertical
06/21/97	05:08:33	-0.38	0.22	-0.24	0.08	-1.02	0.86
06/21/97	05:08:48	-0.38	0.22	-0.08	0.08	-0.70	0.70
06/21/97	05:09:04	-0.22	0.22	-0.24	0.08	-1.02	0.70
06/21/97	05:09:09	-0.38	0.22	-0.08	0.08	-0.86	0.70
06/21/97	05:09:19	-0.38	0.08	-0.24	0.08	-0.86	0.86
06/21/97	05:09:29	-0.38	0.08	-0.08	0.08	-0.86	0.70
06/21/97	05:09:39	-0.38	0.22	-0.08	0.08	-1.02	0.70
06/21/97	05:09:44	-0.38	0.22	-0.24	0.08	-0.86	0.70
06/21/97	05:09:50	-0.22	0.22	-0.24	0.08	-1.02	0.70
06/21/97	05:09:55	-0.38	0.08	-0.08	0.08	-0.86	0.86
06/21/97	05:10:05	-0.38	0.08	-0.08	0.08	-0.70	0.70
06/21/97	05:10:10	-0.38	0.22	-0.24	0.08	-0.86	0.86
06/21/97	05:10:41	-0.22	0.22	-0.08	0.08	-0.86	0.70
06/21/97	05:10:46	-0.38	0.22	-0.08	0.08	-0.70	0.54
06/21/97	05:10:51	-0.38	0.08	-0.08	0.08	-0.86	0.70
06/21/97	05:11:06	-0.38	0.22	-0.08	0.08	-0.86	0.86
06/21/97	05:12:02	-0.22	0.08	-0.08	0.08	-1.02	0.70
06/21/97	05:12:07	-0.22	0.08	-0.08	0.08	-1.02	0.86
06/21/97	05:12:12	-0.38	0.08	-0.08	0.08	-1.02	0.86
06/21/97	05:12:17	-0.38	0.08	-0.08	0.08	-0.86	0.70
06/21/97	05:12:38	-0.22	0.08	-0.08	0.08	-0.86	0.54
06/21/97	05:13:18	-0.22	0.08	-0.24	0.08	-0.86	0.70
06/21/97	05:14:25	-0.22	0.08	-0.08	0.08	-1.02	0.70
06/21/97	05:14:45	-0.22	0.08	-0.08	0.08	-0.86	1.02
06/21/97	05:15:00	-0.38	0.22	-0.24	0.08	-0.86	0.70
06/21/97	05:15:05	-0.54	0.68	-0.24	0.08	-1.64	1.16
06/21/97	05:15:11	-0.22	0.08	-0.08	0.08	-0.86	0.70
06/21/97	05:15:26	-0.22	0.08	-0.24	0.08	-1.02	0.86
06/21/97	05:15:31	-0.38	0.38	-0.24	0.24	-1.02	1.16
06/21/97	05:15:36	-0.22	0.08	-0.08	0.08	-0.86	0.70
06/21/97	05:15:41	-0.38	0.22	-0.08	0.08	-1.00	1.16
06/21/97	05:15:52	-0.38	0.08	-0.08	0.08	-1.02	0.86
06/21/97	05:15:57	-0.38	0.08	-0.08	0.08	-1.16	0.70
06/21/97	05:16:17	-0.22	0.22	-0.08	0.08	-0.86	0.70
06/21/97	05:16:53	-0.22	0.08	-0.08	0.08	-0.86	0.86
06/21/97	05:16:58	-0.22	0.08	-0.08	0.08	-0.86	1.00
06/21/97	05:17:08	-0.22	0.08	-0.08	0.24	-0.86	0.70
06/21/97	05:17:13	-0.22	0.08	-0.24	0.08	-1.02	0.86
06/21/97	05:17:18	-0.22	0.22	-0.24	0.08	-0.86	0.70
06/21/97	05:17:39	-0.38	0.22	-0.24	0.08	-0.86	0.86
06/21/97	05:18:04	-0.22	0.08	-0.08	0.24	-0.86	0.70
06/21/97	05:18:09	-0.38	0.08	-0.08	0.08	-0.70	0.70
06/21/97	05:18:14	-0.38	0.22	-0.24	0.08	-0.86	0.86
06/21/97	05:18:35	-0.22	0.08	-0.08	0.24	-1.00	0.86
06/21/97	05:18:45	-0.22	0.08	-0.08	0.08	-1.16	1.02
06/21/97	05:18:55	-0.38	0.22	-0.24	0.08	-0.86	0.86
06/21/97	05:19:06	-0.38	0.22	-0.24	0.08	-1.16	1.02

Shock/Vibration Report by Event							
Event Date	Event Time	Min. X-Axis Lateral	Max. X-Axis Lateral	Min. Y-Axis Longitudinal	Max. Y-Axis Longitudinal	Min. Z-Axis Vertical	Max. Z-Axis Vertical
06/21/97	05:19:11	-0.38	0.22	-0.24	0.24	-1.02	0.86
06/21/97	05:19:16	-0.22	0.08	-0.24	0.08	-1.02	1.02
06/21/97	05:19:21	-0.22	0.08	-0.08	0.08	-0.86	0.86
06/21/97	05:20:17	-0.22	0.08	-0.08	0.24	-1.02	0.86
06/21/97	05:20:22	-0.22	0.22	-0.08	0.08	-0.86	0.86
06/21/97	05:20:32	-0.22	0.08	-0.24	0.08	-1.16	0.86
06/21/97	05:20:37	-0.38	0.08	-0.08	0.08	-0.86	0.70
06/21/97	05:20:42	-0.54	0.38	-0.24	0.08	-0.86	1.16
06/21/97	05:20:52	-0.68	0.54	-0.24	0.24	-1.32	1.48
06/21/97	05:20:58	-0.68	0.38	-0.24	0.08	-0.86	1.16
06/21/97	05:21:18	-0.22	0.08	-0.24	0.08	-1.02	0.70
06/21/97	05:21:33	-0.22	0.08	-0.08	0.08	-1.16	0.86
06/21/97	05:21:54	-0.22	0.22	-0.08	0.08	-1.00	0.70
06/21/97	05:21:59	-0.22	0.22	-0.08	0.08	-1.02	0.70
06/21/97	05:22:29	-0.22	0.08	-0.24	0.08	-1.02	0.86
06/21/97	05:22:40	-0.54	0.22	-0.24	0.24	-1.16	0.86
06/21/97	05:22:45	-0.38	0.22	-0.08	0.08	-0.86	1.02
06/21/97	05:23:05	-0.22	0.08	-0.08	0.24	-1.02	0.86
06/21/97	05:23:31	-0.22	0.08	-0.08	0.08	-0.86	0.86
06/21/97	05:23:36	-0.22	0.22	-0.24	0.08	-0.86	0.86
06/21/97	05:23:56	-0.22	0.08	-0.08	0.24	-1.02	0.86
06/21/97	05:24:11	-0.38	0.08	-0.24	0.08	-1.16	0.70
06/21/97	05:24:22	-0.22	0.08	-0.08	0.08	-0.70	0.70
06/21/97	05:24:27	-0.38	0.08	-0.08	0.08	-1.00	0.86
06/21/97	05:24:37	-0.38	0.08	-0.08	0.08	-1.02	0.70
06/21/97	05:24:42	-0.22	0.22	-0.08	0.08	-0.86	0.86
06/21/97	05:25:08	-0.22	0.08	-0.24	0.08	-1.00	0.86
06/21/97	05:25:13	-0.38	0.38	-0.24	0.08	-1.02	0.70
06/21/97	05:25:28	-0.22	0.08	-0.08	0.08	-1.16	0.86
06/21/97	05:25:43	-0.22	0.08	-0.24	0.08	-1.02	0.86
06/21/97	05:25:49	-0.22	0.08	-0.08	0.08	-1.02	1.02
06/21/97	05:25:54	-0.22	0.08	-0.08	0.08	-0.86	0.70
06/21/97	05:25:59	-0.38	0.08	-0.24	0.24	-0.86	1.02
06/21/97	05:26:04	-0.22	0.08	-0.24	0.08	-1.02	0.86
06/21/97	05:26:24	-0.22	0.08	-0.24	0.08	-1.02	0.70
06/21/97	05:28:47	-0.22	0.08	-0.08	0.08	-0.86	0.70
06/21/97	05:29:12	-0.38	0.22	-0.24	0.08	-1.02	1.02
06/21/97	05:29:58	-0.38	0.08	-0.08	0.08	-0.86	0.86
06/21/97	05:30:03	-0.38	0.08	-0.08	0.08	-0.86	0.86
06/21/97	05:30:23	-0.22	0.08	-0.24	0.08	-0.86	0.86
06/21/97	05:30:49	-0.22	0.22	-0.08	0.08	-0.86	0.86
06/21/97	05:30:54	-0.22	0.22	-0.08	0.08	-0.86	0.86
06/21/97	05:31:04	-0.38	0.08	-0.08	0.08	-1.02	1.02
06/21/97	05:31:30	-0.38	0.22	-0.08	0.08	-1.02	0.70
06/21/97	05:31:35	-0.22	0.08	-0.08	0.08	-0.86	0.70
06/21/97	05:33:12	-0.38	0.08	-0.08	0.08	-0.70	0.70
06/21/97	05:34:13	-0.22	0.08	-0.08	0.08	-1.02	0.86

Shock/Vibration Report by Event							
Event Date	Event Time	Min. X-Axis Lateral	Max. X-Axis Lateral	Min. Y-Axis Longitudinal	Max. Y-Axis Longitudinal	Min. Z-Axis Vertical	Max. Z-Axis Vertical
06/21/97	05:34:54	-0.22	0.08	-0.24	0.08	-1.02	0.70
06/21/97	05:36:15	-0.22	0.08	-0.08	0.08	-0.86	0.70
06/21/97	05:37:01	-0.54	0.38	-0.24	0.08	-0.86	0.70
06/21/97	05:37:16	-0.38	0.08	-0.24	0.08	-1.02	0.70
06/21/97	05:37:27	-0.22	0.08	-0.08	0.08	-0.86	1.02
06/21/97	05:37:57	-0.22	0.08	-0.08	0.08	-0.86	0.70
06/21/97	05:38:12	-0.22	0.22	-0.24	0.08	-0.86	0.70
06/21/97	05:38:18	-0.38	0.22	-0.08	0.08	-0.86	0.70
06/21/97	05:38:33	-0.22	0.08	-0.24	0.08	-1.16	1.02
06/21/97	05:38:38	-0.22	0.08	-0.24	0.24	-1.02	0.70
06/21/97	05:38:53	-0.38	0.22	-0.08	0.08	-1.02	0.86
06/21/97	05:38:58	-0.22	0.08	-0.08	0.08	-0.86	0.70
06/21/97	05:39:13	-0.22	0.08	-0.24	0.08	-0.86	0.70
06/21/97	05:39:18	-0.22	0.08	-0.24	0.08	-1.02	0.70
06/21/97	05:39:34	-0.38	0.22	-0.08	0.08	-1.16	0.70
06/21/97	05:39:39	-0.38	0.22	-0.24	0.24	-1.16	1.02
06/21/97	05:39:49	-0.38	0.08	-0.24	0.08	-0.86	0.86
06/21/97	05:48:26	-0.38	0.22	-0.40	0.24	-1.64	1.02
06/21/97	06:09:35	-0.22	0.22	-0.08	0.08	-0.86	0.70
06/21/97	06:09:41	-0.22	0.22	-0.08	0.08	-0.86	0.70
06/21/97	06:10:01	-0.22	0.22	-0.08	0.08	-0.86	1.00
06/21/97	06:10:21	-0.22	0.08	-0.08	0.08	-0.86	0.86
06/21/97	06:10:37	-0.22	0.08	-0.08	0.08	-0.86	0.86
06/21/97	06:10:42	-0.38	0.08	-0.08	0.08	-0.86	0.70
06/21/97	06:10:47	-0.38	0.08	-0.08	0.08	-1.00	0.70
06/21/97	06:10:52	-0.38	0.08	-0.08	0.08	-0.86	0.86
06/21/97	06:12:23	-0.38	0.08	-0.08	0.08	-0.86	0.70
06/21/97	06:12:38	-0.38	0.22	-0.08	0.08	-0.86	0.70
06/21/97	06:12:49	-0.22	0.08	-0.24	0.08	-1.00	1.00
06/21/97	06:13:40	-0.38	0.08	-0.08	0.08	-0.86	0.54
06/21/97	06:13:45	-0.38	0.22	-0.08	0.08	-0.86	0.70
06/21/97	06:14:15	-0.38	0.08	-0.08	0.08	-0.86	0.70
06/21/97	06:14:31	-0.38	0.08	-0.24	0.08	-1.00	0.86
06/21/97	06:14:36	-0.38	0.22	-0.08	0.08	-1.00	1.00
06/21/97	06:15:06	-0.38	0.08	-0.24	0.08	-0.86	0.70
06/21/97	06:15:47	-0.22	0.22	-0.08	0.08	-0.86	0.70
06/21/97	06:15:57	-0.68	0.54	-0.24	0.24	-1.48	1.32
06/21/97	06:18:00	-0.38	0.08	-0.08	0.08	-1.00	1.00
06/21/97	06:18:25	-0.22	0.08	-0.24	0.24	-1.00	0.86
06/21/97	06:18:35	-0.22	0.08	-0.24	0.08	-1.16	1.16
06/21/97	06:19:26	-0.22	0.08	-0.24	0.08	-0.86	0.86
06/21/97	06:20:07	-0.38	0.08	-0.24	0.08	-1.00	0.70
06/21/97	06:28:25	-0.68	0.38	-0.24	0.08	-0.70	0.86
06/21/97	06:30:27	-0.38	0.22	-0.24	0.08	-0.86	0.70
06/21/97	06:30:32	-0.38	0.22	-0.08	0.08	-0.86	0.86
06/21/97	06:30:37	-0.38	0.22	-0.08	0.08	-0.86	0.70
06/21/97	06:30:43	-0.38	0.08	-0.08	0.08	-1.16	0.70

Shock/Vibration Report by Event							
Event Date	Event Time	Min. X-Axis Lateral	Max. X-Axis Lateral	Min. Y-Axis Longitudinal	Max. Y-Axis Longitudinal	Min. Z-Axis Vertical	Max. Z-Axis Vertical
06/21/97	06:30:53	-0.22	0.22	-0.08	0.08	-1.16	0.70
06/21/97	06:30:58	-0.38	0.22	-0.24	0.08	-0.86	0.70
06/21/97	06:31:08	-0.22	0.22	-0.08	0.08	-0.86	0.86
06/21/97	06:59:24	-0.54	0.38	-0.08	0.08	-0.54	0.86
06/21/97	07:01:31	-0.38	0.22	-0.08	0.08	-0.86	0.86
06/21/97	07:01:36	-0.38	0.22	-0.24	0.08	-0.70	0.70
06/21/97	07:08:05	-0.38	0.22	-0.08	0.24	-1.16	1.16
06/21/97	07:08:25	-0.22	0.22	-0.24	0.08	-1.00	0.86
06/21/97	07:08:45	-0.38	0.22	-0.08	0.08	-1.00	0.54
06/21/97	07:08:56	-0.38	0.22	-0.08	0.08	-0.70	0.70
06/21/97	07:12:24	-0.54	1.14	-0.08	0.08	-0.70	0.70
06/21/97	07:14:06	-0.38	0.22	-0.24	0.08	-0.86	0.70
06/21/97	07:14:16	-0.38	0.22	-0.24	0.08	-0.86	0.86
06/21/97	07:14:21	-0.38	0.22	-0.08	0.08	-0.86	0.70
06/21/97	07:14:52	-0.54	0.22	-0.08	0.08	-0.70	0.70
06/21/97	07:15:12	-0.38	0.22	-0.24	0.24	-1.00	0.70
06/21/97	07:15:18	-0.38	0.22	-0.08	0.08	-1.00	1.00
06/21/97	07:15:33	-0.22	0.22	-0.08	0.08	-1.00	0.70
06/21/97	07:15:59	-0.84	0.54	-0.24	0.24	-2.10	1.94
06/21/97	07:16:04	-0.38	0.38	-0.24	0.08	-0.70	0.70
06/21/97	07:16:14	-0.38	0.38	-0.24	0.24	-1.32	1.16
06/21/97	07:16:24	-0.38	0.22	-0.24	0.08	-0.86	0.86
06/21/97	07:16:29	-0.38	0.22	-0.08	0.08	-1.00	0.86
06/21/97	07:37:01	-0.54	0.54	-0.24	0.24	-1.16	0.86
06/22/97	17:25:20	-0.54	0.38	-0.08	0.08	-0.86	0.86
06/22/97	17:42:43	-0.38	0.24	-0.24	0.08	-0.86	0.70
06/22/97	17:42:48	-0.24	0.24	-0.24	0.08	-1.02	1.18
06/22/97	17:43:03	-0.24	0.08	-0.08	0.08	-0.86	0.56
06/22/97	17:43:34	-0.24	0.08	-0.08	0.08	-1.18	1.02
06/22/97	17:43:39	-0.38	0.08	-0.24	0.08	-1.02	0.70
06/22/97	17:44:15	-0.70	0.54	-0.24	0.08	-0.70	0.86
06/28/97	13:44:53	-0.54	0.38	-1.50	0.72	-0.88	2.46
06/28/97	13:45:34	-0.24	0.70	-0.24	0.24	-0.56	0.56
06/28/97	13:45:42	-0.24	0.70	-0.24	0.56	-0.24	0.56
06/28/97	13:45:49	-0.38	0.38	-0.24	0.56	-1.66	0.08
06/28/97	13:45:55	-0.38	0.54	-0.24	0.72	-0.56	1.34
06/28/97	13:46:07	-0.54	0.24	-0.56	0.88	-1.34	0.56
06/28/97	13:46:15	-1.16	0.70	-0.56	0.24	-0.56	0.86
06/28/97	13:46:23	-0.86	0.08	-0.40	0.24	-0.08	1.02
06/28/97	13:46:47	-0.24	0.24	-0.24	0.72	-1.18	0.24
06/28/97	13:50:25	-0.86	0.40	-0.56	0.72	-1.04	2.78
06/28/97	13:52:00	-0.86	0.24	-0.56	0.56	-0.72	1.04
06/28/97	13:52:33	-0.40	0.70	-0.40	0.24	-0.40	0.72
06/28/97	13:52:40	-0.24	0.24	-0.24	0.24	-0.40	0.40
06/28/97	13:53:18	-0.40	0.24	-0.24	0.08	-0.72	0.08
06/29/97	12:47:09	-0.22	0.22	-0.54	0.08	-0.70	0.38
06/29/97	12:47:32	-0.54	0.08	-0.24	0.24	-0.38	0.08

Shock/Vibration Report by Event							
Event Date	Event Time	Min. X-Axis Lateral	Max. X-Axis Lateral	Min. Y-Axis Longitudinal	Max. Y-Axis Longitudinal	Min. Z-Axis Vertical	Max. Z-Axis Vertical
06/29/97	12:47:38	-0.22	0.38	-0.40	0.70	-1.64	0.08
06/29/97	12:47:49	-0.22	0.08	-0.08	0.24	-0.86	0.08
06/29/97	13:00:19	-0.38	0.22	-0.40	1.02	-1.80	0.08
06/29/97	13:01:26	-0.38	0.54	-0.08	0.24	-0.54	0.24
06/29/97	13:09:48	-0.38	0.38	-0.40	0.24	-0.86	1.18
06/29/97	13:09:53	-0.54	0.38	-0.54	0.24	-1.02	0.86
06/29/97	13:33:43	-0.54	0.54	-0.54	0.40	-0.86	1.02
06/29/97	13:35:25	-0.54	0.54	-0.40	0.40	-0.70	0.54
06/29/97	13:37:46	-0.68	0.54	-0.38	0.38	-0.54	0.54
06/29/97	13:37:51	-0.54	0.38	-0.38	0.38	-0.54	0.38
06/29/97	13:37:56	-0.54	0.38	-0.38	0.54	-0.38	0.38
06/29/97	13:38:01	-0.54	0.38	-0.38	0.38	-0.38	0.54
06/29/97	13:43:12	-0.38	0.22	-0.24	0.24	-0.38	0.38
06/29/97	13:43:17	-0.38	0.54	-0.38	0.38	-0.70	0.38
06/29/97	13:43:22	-0.54	0.54	-0.40	0.54	-0.54	0.38
06/29/97	13:43:27	-0.54	0.54	-0.54	0.54	-0.54	0.54
06/29/97	13:43:32	-0.68	0.54	-0.38	0.54	-0.54	0.54
06/29/97	13:47:26	-0.38	0.38	-0.54	0.54	-1.16	1.32
06/29/97	13:47:43	-0.54	0.22	-0.38	0.24	-0.54	0.54
06/29/97	13:51:24	-0.54	0.38	-0.24	0.38	-0.70	0.70
06/29/97	13:51:29	-0.38	0.22	-0.24	0.24	-0.54	0.38
06/29/97	13:52:47	-0.98	0.54	-0.38	0.70	-1.16	0.86
06/29/97	13:53:58	-0.54	0.38	-0.24	0.38	-0.38	0.38
06/29/97	13:54:04	-0.68	0.54	-0.24	0.38	-0.24	0.54
06/29/97	13:54:11	-0.54	0.22	-0.24	0.38	-0.38	0.38
06/29/97	13:54:31	-0.08	0.22	-0.24	0.38	-1.00	0.24
06/29/97	13:55:07	-0.54	0.54	-0.24	0.54	-0.70	0.38
06/30/97	06:41:23	-0.08	0.54	-0.24	0.08	-0.54	0.08
06/30/97	06:41:33	-0.38	0.38	-0.24	0.24	-0.24	1.46
06/30/97	06:41:39	-0.08	0.54	-0.08	0.24	-1.32	0.08
06/30/97	06:41:50	-0.38	0.22	-0.08	0.24	-0.08	1.78
06/30/97	09:14:52	-0.08	0.84	-0.08	0.08	-1.48	0.08

REV NO. 1 APPROVED BY U.S. COAST GUARD	REV NO. 1 APPROVED BY HAZARDOUS MATERIALS SYSTEMS (BOE) ASSOCIATION OF AMERICAN RAILROADS
M D Mrowne Hr	J H Clerkman
DATE 8/1/88	DATE 7/6/88

LOADING AND BRACING◑ IN MILVAN CONTAINERS⊕ OF GAU-8/A 30MM AMMUNITION PACKAGED IN AUTOMATIC LOADING SYSTEM (ALS) CNU-309/E AND/OR CNU-332/E CONTAINERS●

◑ LOADING AND BRACING SPECIFICATIONS SET FORTH WITHIN THIS DRAWING ARE APPLICABLE TO LOADS THAT ARE TO BE SHIPPED BY TRAILER/CONTAINER-ON-FLAT-CAR (T/COFC) RAIL CARRIER SERVICE. THESE SPECIFICATIONS MAY ALSO BE USED FOR LOADS THAT ARE TO BE MOVED BY MOTOR OR WATER CARRIERS. SEE GENERAL NOTE "T" ON PAGE 2.

⊕ ONLY MILVAN CONTAINERS WHICH HAVE BEEN MODIFIED TO INCLUDE A MECHANICAL LOAD-BRACING SYSTEM THAT SATISFIES THE REQUIREMENTS OF THE BUREAU OF EXPLOSIVES PAMPHLET 6C WILL BE USED FOR THE MOVEMENT OF AMMUNITION BY T/COFC SERVICE. CAUTION: OTHER REQUIREMENTS OF PAMPHLET 6C ALSO APPLY.

● THESE MILVAN LOADING PROCEDURES ARE ALSO APPLICABLE FOR SHIPMENTS OF A MIXED LOAD OF CNU-309A/E AND CNU-332A/E CONTAINERS.

REVISIONS				DRAFTSMAN SN / AP	PROJ ENG RSH / WRF
				CHECKER	LOG ENGRG OFFICE W F Ernst
1	FEB 88	WRF / WFE	William F Ernst	APPROVED, U.S. ARMY ARMAMENT, MUNITIONS AND CHEMICAL COMMAND	
				APPROVED BY ORDER OF COMMANDING GENERAL, U.S. ARMY MATERIEL COMMAND (AMC) William F Ernst U.S. ARMY DEFENSE AMMUNITION CENTER AND SCHOOL	
				U.S. ARMY AMC DRAWING	
				DEF AMMO CEN & SCH DWG NO.	
				D-SARAC-4417	

DO NOT SCALE

GENERAL NOTES

A. THIS DOCUMENT HAS BEEN PREPARED AND ISSUED IN ACCORDANCE WITH AR 740-1 AND AUGMENTS TM 743-200-1 (CHAPTER 5).

B. THE SPECIFIED OUTLOADING PROCEDURES APE APPLICABLE TO 30MM AMMUNITION PACKED IN CNU-309/E AND/OR CNU-332/E METAL CONTAINERS. SUBSEQUENT REFERENCE TO TWIN-PACK UNIT MEANS TWO CNU-309/E OR TWO CNU-332/E CONTAINERS PINNED AND STRAPPED TOGETHER CONTAINING THE AMMUNITION ITEMS. CAUTION: REGARDLESS OF THE QUANTITY OF TWIN-PACK UNITS TO BE SHIPPED, THE "MAXIMUM GROSS WEIGHT" OF 44,800 POUNDS MUST NOT BE EXCEEDED. SEE PAGE 3 FOR DETAILS OF THE METAL CONTAINERS.

C. THE LOAD AS SHOWN IS BASED ON A 20' LONG BY 8' WIDE BY 8' HIGH MILVAN CONTAINER WITH INSIDE DIMENSIONS OF 19'-4" LONG BY 92" WIDE BY 87" HIGH. THE LOAD IS DESIGNED FOR TRAILER/CONTAINER-ON-FLAT-CAR (T/COFC) SHIPMENT.

D. THE SPECIFIED OUTLOADING PROCEDURES ARE FOR CONTAINERS EQUIPPED WITH SELF-CONTAINED MECHANICAL BRACING DEVICES AS DESCRIBED WITHIN BUREAU OF EXPLOSIVES PAMPHLET 6C. CROSS MEMBER ATTACHMENT FACILITIES WITHIN THESE CONTAINERS MUST PROVIDE FOR THE INSTALLATION OF LOAD BLOCKING CROSS MEMBERS AT THE HEIGHTS SPECIFIED. THE HEIGHT DIMENSIONS SPECIFIED WITHIN THIS DRAWING FOR THE INSTALLATION OF CROSS MEMBERS CONFORM WITH BUREAU OF EXPLOSIVES PAMPHLET 6C, WITH THE EXCEPTION THAT TWO (2) ADDITIONAL BELT RAILS HAVE BEEN SHOWN; ONE AT 72" AND ONE AT 83" ABOVE THE CONTAINER FLOOR. VOIDS LENGTHWISE WITHIN THE LOAD MUST BE HELD TO A MINIMUM. CROSS MEMBERS MUST BE PLACED AGAINST THE LADING AS TIGHTLY AS THE HOLE SPACING IN THE CROSS MEMBER ATTACHMENT FACILITY PERMITS. SEE THE "FILL DETAIL" ON PAGE 5 FOR ADDITIONAL GUIDANCE. EACH CROSS MEMBER WILL BE INSTALLED WITH THE ENDS ATTACHED AS NEARLY AS POSSIBLE IN "MATED" POSITIONS (AT EQUAL HEIGHTS, AND AT EQUAL DISTANCES FROM THE END OF THE CONTAINER). CROSS MEMBERS IN EMPTY CONTAINERS AND THOSE NOT USED IN LOADED CONTAINERS MUST BE FASTENED INTO BELT RAILS FOR SHIPMENT. COMPONENTS ASSIGNED TO EACH CONTAINER MUST REMAIN THEREWITH EVEN THROUGH UNUSED DURING SOME SHIPMENTS. THE LOAD BLOCKING COMPONENT DESIGNATED AS "CROSS MEMBER" IS IDENTIFIED AS "BEAM ASSEMBLY" WITHIN TM 55-8115-200-24, DATED SEPTEMBER 1972. THE BEAM ASSEMBLY IS FURTHER IDENTIFIED AS NSN 8115-00-165-6623 (FORMERLY FSN 8115-165-6623).

E. ALTHOUGH A TOTAL OF ONE AND ONE-HALF INCHES (1-1/2") OF UNBLOCKED SPACE ACROSS THE WIDTH OF A LOAD BAY IS PERMITTED, LATERAL VOIDS WITHIN THE LOAD ARE TO BE HELD TO THE MINIMUM. EXCESSIVE SLACK CAN BE ELIMINATED FROM A LOAD BAY BY LAMINATING ADDITIONAL BEARING PIECES OF APPROPRIATE THICKNESS TO THE BEARING PIECES OF ONE OR MORE SIDE FILL GATES ON ONE OR BOTH SIDES OF THE CONTAINER. FIVE (5) NAILS OF APPROPRIATE SIZE WILL BE USED TO LAMINATE EACH ADDED BEARING PIECE.

F. DUNNAGE LUMBER SPECIFIED IS OF A NOMINAL SIZE. FOR EXAMPLE, 1" X 6" MATERIAL IS ACTUALLY 3/4" THICK BY 5-1/2" WIDE AND 2" X 4" MATERIAL IS ACTUALLY 1-1/2" THICK BY 3-1/2" WIDE.

G. CAUTION: DO NOT NAIL DUNNAGE MATERIAL TO THE CONTAINER WALLS OR FLOOR. ALL NAILING WILL BE WITHIN THE DUNNAGE.

H. A STAGGERED NAILING PATTERN WILL BE USED WHEREVER POSSIBLE WHEN NAILS ARE DRIVEN INTO JOINTS OF DUNNAGE ASSEMBLIES OR WHEN LAMINATING DUNNAGE. ADDITIONALLY, THE NAILING PATTERN FOR AN UPPER PIECE OF LAMINATED DUNNAGE WILL BE ADJUSTED AS REQUIRED SO THAT A NAIL FOR THAT PIECE WILL NOT BE DRIVEN THROUGH ONTO OR RIGHT BESIDE A NAIL IN A LOWER PIECE.

J. PORTIONS OF THE CONTAINER DEPICTED WITHIN THIS DRAWING, SUCH AS ONE OF THE SIDE WALLS, HAVE NOT BEEN SHOWN IN THE LOAD VIEWS FOR CLARITY PURPOSES.

K. CAUTION: TWIN-PACK UNITS MUST BE LOADED IN A MILVAN WITH THE SAME END FORWARD TO INSURE PROPER OVERLAPPING OF THE STEEL ANGLES WELDED TO THE SIDES OF THE CNU-309/E OR CNU-332/E CONTAINER. ALSO, WHEN LOADING THE SECOND AND THIRD TWIN-PACK UNITS INTO A LOAD BAY, THE SECOND AND THIRD UNITS MUST BE SLID INTO PLACE SO THAT THE STEEL ANGLES WILL OVERLAP PROPERLY AND NOT IMPROPERLY INTERLOCK. BOTH CNU-309/E AND CNU-332/E CONTAINERS MAY BE SHIPPED IN THE SAME MILVAN CONTAINER LOAD BUT NOT IN THE SAME LOAD BAY UNLESS AN ADDITIONAL FILLER PIECE IS WIRE TIED TO THE CROSS MEMBER TO COMPENSATE FOR THE SHORTER LENGTH OF THE CNU-332/E CONTAINER. SEE THE "FILL DETAIL" ON PAGE 5 FOR ADDITIONAL GUIDANCE.

(CONTINUED AT RIGHT)

MATERIAL SPECIFICATIONS

LUMBER ----------: TM 743-200-1 (DUNNAGE LUMBER) AND FED SPEC MM-L-751.

NAILS ----------: FED SPEC FF-N-105; COMMON.

STAPLE, STRAP ----------: COMMERCIAL GRADE.

WIRE ----------: FED SPEC QQ-W-461.

(GENERAL NOTES CONTINUED)

L. THE ITEMIZED LOAD WEIGHTS ARE CONTROLLED BY EQUIPMENT CAPACITY FACTORS. ALSO, THESE LISTED LOAD WEIGHTS IDENTIFY THE MAXIMUM COMBINED WEIGHTS OF AMMUNITION LADING UNITS AND DUNNAGE THAT CAN BE PLACED INTO ONE (1) MILVAN CONTAINER WITHOUT VIOLATING ONE OR MORE OF THE "CAPABILITY FACTORS". SEE NOTES 1 AND 2.

39,100 LBS IN 20-FT CONTAINER (W/O CHASSIS) ABOARD CONTAINERSHIP.
39,100 LBS IN CONTAINER ON 20-FT CHASSIS WITH DOUBLE BOGIE. SEE NOTE 3.
25,300 LBS IN CONTAINER ON 20-FT CHASSIS WITH SINGLE BOGIE. SEE NOTE 4.
21,300 LBS IN EACH CONTAINER ON 40-FT CHASSIS (COUPLED WITH DOUBLE BOGIE). SEE NOTE 3.

NOTE 1: DUNNAGE INCLUDES MATERIALS, OTHER THAN COMPONENTS OF THE MECHANICAL LOAD-BRACING SYSTEM, USED TO BLOCK AND BRACE A LOAD.

NOTE 2: ALTHOUGH THE HEAVIEST MAXIMUM LOAD IS DELINEATED ON PAGES 4 AND 5, PROVISIONS ARE INCLUDED WITHIN THIS DRAWING SO THAT THE BASIC LOAD CAN BE ADJUSTED TO SATISFY A LESSER QUANTITY OF LADING UNITS. ADDITIONAL INSTRUCTIONS ARE UNDER THE "REDUCED-LOAD PROVISIONS" SECTION ON PAGE 4.

NOTE 3: DEPENDING ON TRANSPORTATION ROUTING, IT MAY BE NECESSARY TO REDUCE THE LOAD WEIGHT TO SATISFY "WEIGHT LAWS" OF CERTAIN STATES. ALSO, IT MAY BE NECESSARY TO REDUCE THE LOAD WEIGHT TO SATISFY OTHER WEIGHT RESTRICTIONS IMPOSED ON THE MILVAN SYSTEM.

NOTE 4: BY SPECIAL AUTHORITY, IT MAY BE POSSIBLE TO MOVE HEAVIER LOADS ON SINGLE BOGIE CHASSIS WITHIN AN INSTALLATION.

M. SPECIAL T/COFC NOTES:

A. CAUTION: LOADED CONTAINERS MUST BE ON CHASSIS EQUIPPED WITH TWO BOGIE ASSEMBLIES WHEN BEING MOVED IN TOFC SERVICE, REGARDLESS OF LOAD WEIGHT WITHIN THE CONTAINERS.

B. LOAD LIMITS OF T/COFC RAIL CARS MUST NOT BE EXCEEDED, NOR WILL A CAR BE LOADED SO THAT THE TRUCK UNDER ONE END OF THE CAR CARRIES MORE THAN ONE-HALF OF THE LOAD LIMIT FOR THAT CAR.

C. CHASSIS/CONTAINERS COUPLED INTO A 40-FT TRAILER CONFIGURATION MUST BE PLACED AT THE B-END OF A TOFC RAIL CAR. THE REAR END OF THE 40-FT UNIT WILL OVER-HANG THE END OF THE CAR IF IT IS PLACED AT THE A-END. TWENTY-FOOT AND 40-FOOT UNITS CAN BE LOADED ON THE SAME CAR.

N. TO READY A TWIN-PACK UNIT FOR SHIPMENT, TWO CNU-309/E CONTAINERS MUST BE PINNED AND STRAPPED TOGETHER WITH THE WOODEN DUNNAGE PROPERLY PLACED BEHIND THE STRAPS AS DEPICTED IN THE "TWIN-PACK UNIT" DETAIL ON PAGE 3; TWO CNU-332/E CONTAINERS MUST ONLY BE PROPERLY PINNED TOGETHER AS DEPICTED ON PAGE 3.

O. CONVERSION TO METRIC EQUIVALENTS: DIMENSIONS WITHIN THIS DOCUMENT ARE EXPRESSED IN INCHES, AND WEIGHTS ARE EXPRESSED IN POUNDS. WHEN NECESSARY, THE METRIC EQUIVALENTS MAY BE COMPUTED ON THE BASIS OF ONE INCH EQUALS 25.4MM AND ONE POUND EQUALS 0.454KG.

P. POWER DRIVEN STAPLES MAY BE USED AS ALTERNATIVE FASTENERS FOR NAILS WHEN CONSTRUCTING DUNNAGE ASSEMBLIES WHICH ARE TO BE USED IN THE DELINEATED LOADS SHOWN THROUGHOUT THIS DRAWING. THE STAPLES TO BE USED MUST BE EQUAL IN LENGTH TO THE SPECIFIED NAIL SIZE AND MUST BE SUBSTITUTED ON A ONE STAPLE FOR ONE NAIL BASIS. STAPLES WHICH ARE 2-1/2" OR LESS IN LENGTH SHOULD BE IN ACCORDANCE WITH FEDERAL SPECIFICATION FF-N-105 AS NEARLY AS PRACTICABLE. STAPLES WHICH ARE LONGER THAN 2-1/2" WILL BE A COMMERCIAL GRADE, OR A QUALITY EQUIVALENT TO THOSE MANUFACTURED BY SENCO PRODUCTS INCORPORATED. NOTE: STAPLES WILL NOT BE SUBSTITUTED FOR NAILS IN ANY LOAD RESTRAINING FLOOR DUNNAGE APPLICATION.

REVISION

REVISION NO. 1, DATED FEBRUARY 1988, CONSISTS OF:

1. ADDING THE CNU-332/E TWIN-PACK UNIT TO THE DEPICTED PROCEDURES.
2. UPDATING GENERAL NOTES.

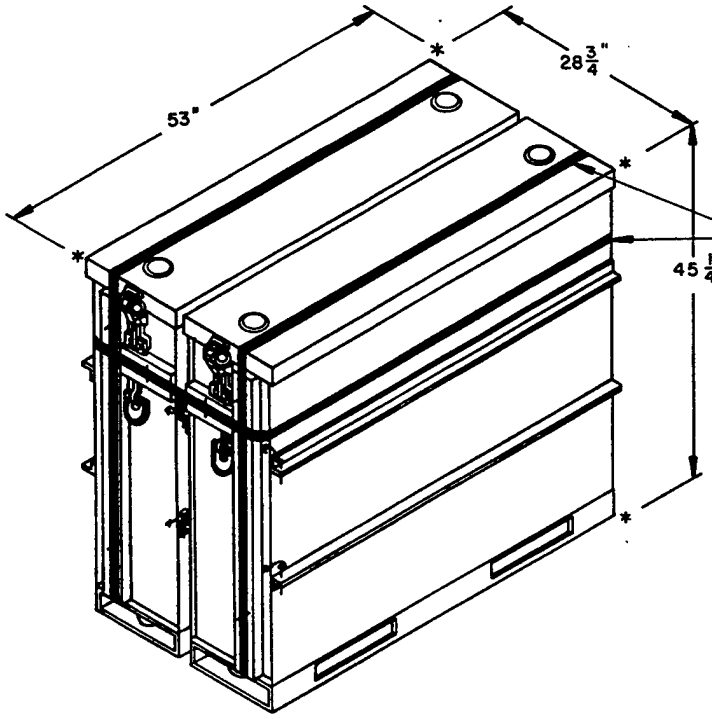

TWIN-PACK UNIT (CNU-309/E CONTAINER)

TWIN-PACK UNIT DATA:

NUMBER OF CONTAINERS	TWO (2)
GROSS WEIGHT	2,350 LBS (APPROX)
CUBE	39.9 CUBIC FEET

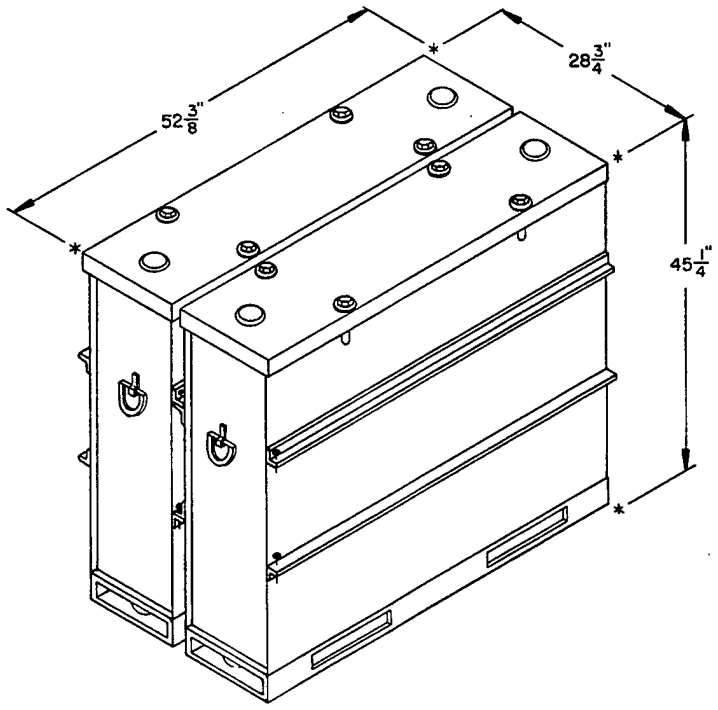

TWIN-PACK UNIT (CNU-332/E CONTAINER)

TWIN-PACK UNIT DATA:

NUMBER OF CONTAINERS	TWO (2)
GROSS WEIGHT	2,350 LBS (APPROX)
CUBE	39.4 CUBIC FEET

TWIN-PACK UNIT DETAILS

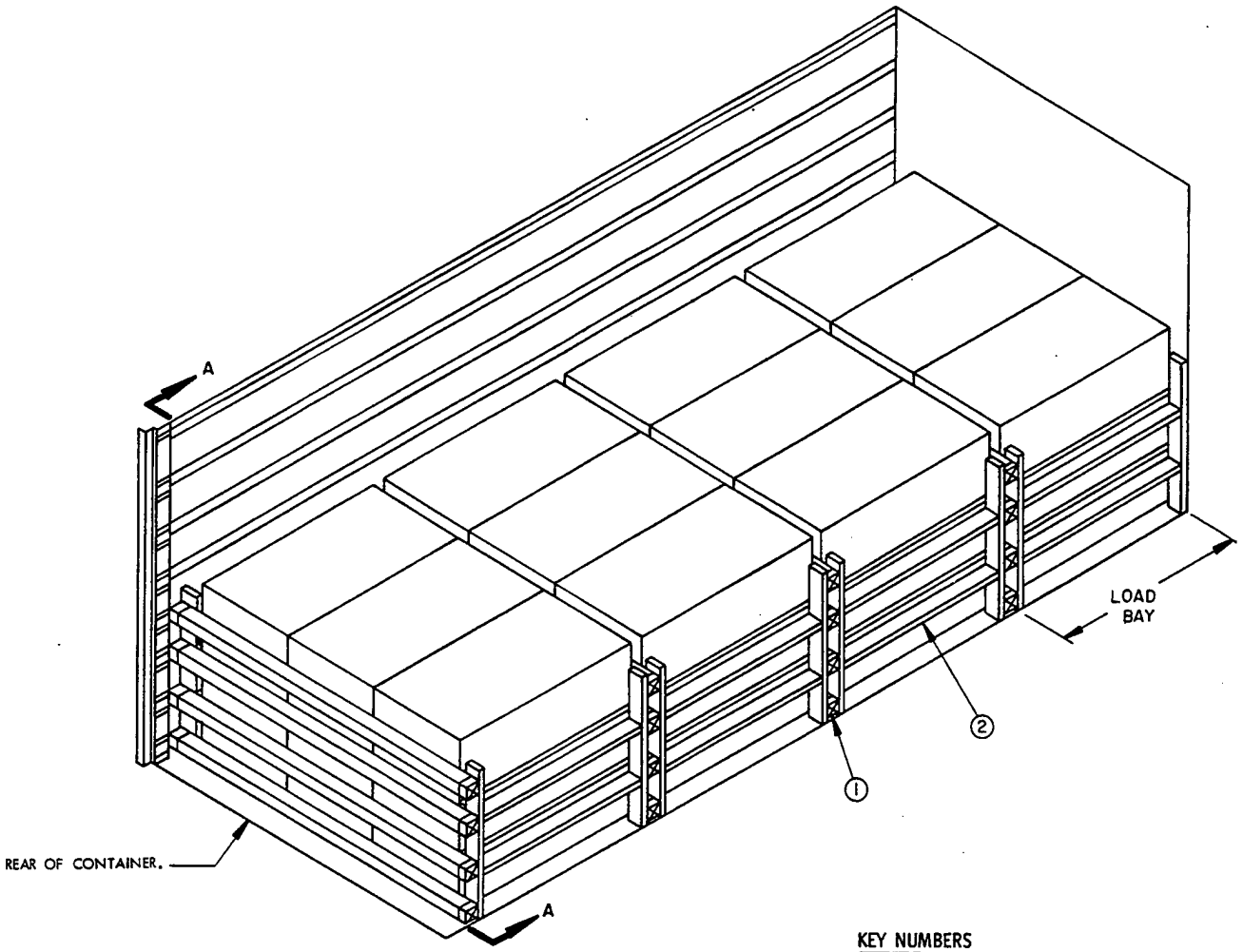

ISOMETRIC VIEW

KEY NUMBERS

① CROSS MEMBER (16 REQD). POSITION AT THE HEIGHTS SPECIFIED IN THE "SECTION A-A" VIEW. SEE THE "FILL DETAIL" ON PAGE 5.

② SIDE FILL GATE (8 REQD). SEE THE "SIDE FILL GATE" DETAIL ON PAGE 6. WIRE TIE TO A BELT RAIL W/2-24" LONG NO. 14 GAGE WIRES. INSTALL TWO TIE WIRES TO FORM A COMPLETE LOOP THRU HOLES IN BELT RAIL AND AROUND EACH SIDE FILL GATE, BRING ENDS TOGETHER AND TWIST TAUT.

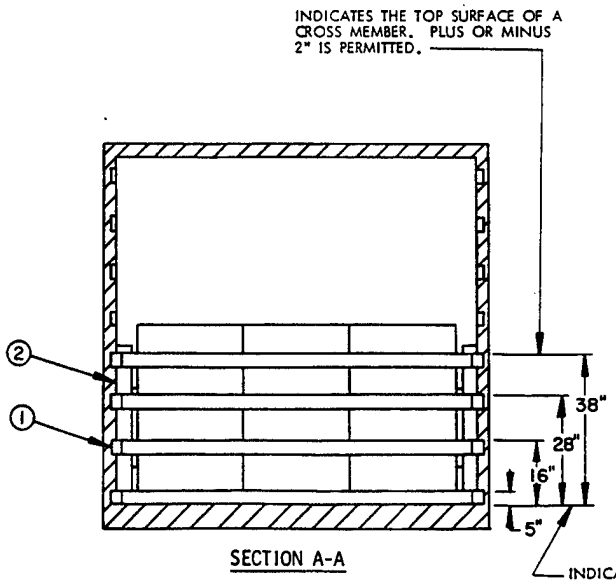

SECTION A-A

REDUCED LOAD PROVISIONS

WHEN A CONTAINER IS TO BE LOADED WITH A REDUCED QUANTITY OF LADING UNITS, THE LENGTHWISE CENTER OF GRAVITY OF A LOAD MUST BE WITHIN 12", IN EITHER DIRECTION, OF THE MIDPOINT IN A MILVAN, AND THE FOLLOWING CRITERIA WILL APPLY.

A. IF A LOAD IS REDUCED BY ONLY A SMALL AMOUNT, LADING UNITS NORMALLY MAY BE ELIMINATED FROM THE REAR OF THE LOAD.

B. IF A LOAD IS REDUCED BY A LARGE AMOUNT, LADING UNITS SHOULD BE ELIMINATED FROM LOCATIONS WITHIN THE LOAD OR LADING UNITS SHOULD BE ELIMINATED AS REQUIRED AND THE TOTAL LOAD SHIFTED AS NECESSARY FORE OR AFT, TO ACHIEVE A SYMMETRICAL WEIGHT DISTRIBUTION. THE DEPICTED PROCEDURES WILL BE FOLLOWED AS CLOSELY AS POSSIBLE, MAKING ONLY THOSE ADJUSTMENTS TO THE DUNNAGE WHICH ARE REQUIRED TO ACCOMMODATE THE NUMBER OF UNITS TO BE SHIPPED.

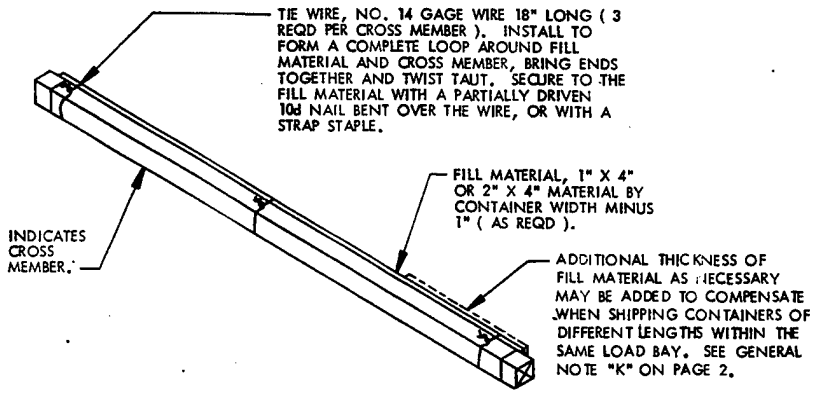

FILL DETAIL

THIS DETAIL DEPICTS METHOD OF POSITIONING FILL MATERIAL BETWEEN CROSS MEMBER AND LADING, WHEN THE VOID BETWEEN THE TWO IS GREATER THAN ONE INCH (1").

BILL OF MATERIAL		
LUMBER	LINEAR FEET	BOARD FEET
2" X 4" 2" X 6"	117 68	78 68
NAILS	NO. REQD	POUNDS
10d (3")	208	3-1/4
WIRE, NO. 14 GAGE ——— 32' REQD ——— 1.2 LB		
CROSS MEMBERS ——— 16 REQD		

LOAD AS SHOWN

ITEM	QUANTITY	WEIGHT (APPROX)
TWIN-PACK UNIT	12	28,200 LBS
DUNNAGE		296 LBS
CONTAINER		5,700 LBS
TOTAL GROSS WEIGHT		34,196 LBS

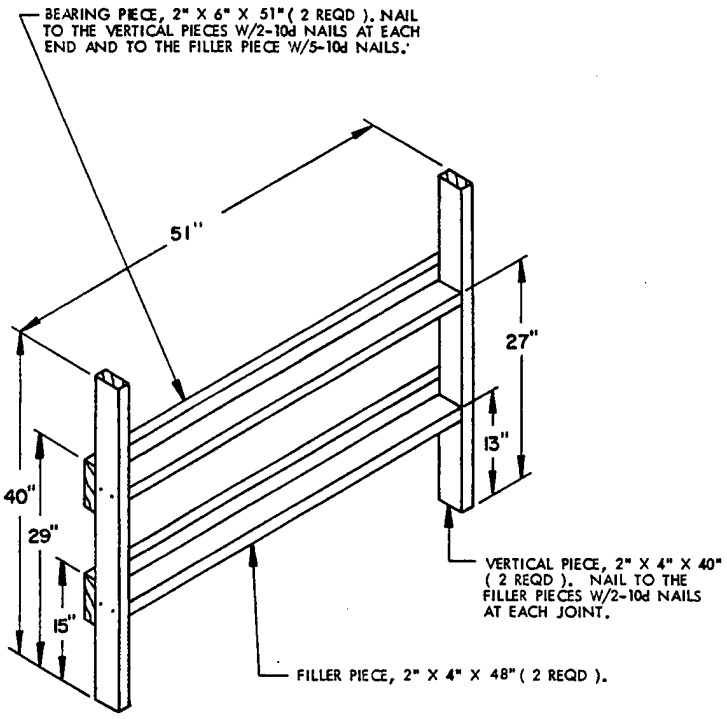

SIDE FILL GATE

THE ASSEMBLY AS DEPICTED ABOVE MAY BE MODIFIED, WHEN EITHER THE INSIDE WIDTH DIMENSION OF THE MILVAN BEING USED IS LESS THAN THE WIDTH AS SPECIFIED IN GENERAL NOTE "C" ON PAGE 2 OR THE TWIN-PACK UNIT WIDTH IS GREATER THAN THAT SPECIFIED BY USING 1" X 6" MATERIAL FOR THE BEARING PIECES ON ONE OR BOTH SIDES OF THE MILVAN IN LIEU OF THE 2" X 6" MATERIAL, AS SPECIFIED. IN ADDITION, 6d NAILS WILL BE USED FOR NAILING THE 1" X 6" BEARING PIECES TO THE VERTICAL AND FILLER PIECES RATHER THAN THE 10d NAILS SPECIFIED ABOVE.

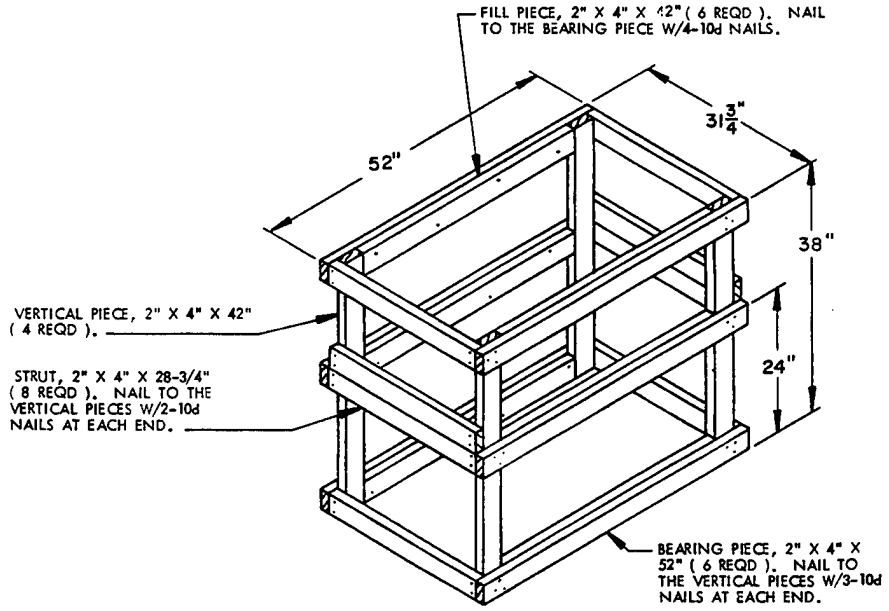

OMITTED-UNIT ASSEMBLY

THE ASSEMBLY AS SPECIFIED ABOVE IS FOR USE IN PLACE OF AN OMITTED TWIN-PACK UNIT, AND WILL BE REQUIRED FOR SOME LOADS TO PROVIDE A 3-WIDE LOADING PATTERN THROUGHOUT THE LENGTH OF THE LOAD. IT WILL NEVER BE REQUIRED TO USE MORE THAN TWO (2) ASSEMBLIES IN ANY ONE LOAD. CAUTION: AN ASSEMBLY OR ASSEMBLIES MUST ONLY BE PLACED WITHIN THE MIDDLE ROW OF A LOAD.